Freeform PLASTICS

A Division of Bourgault Industries Ltd.

Note: For easier movement through our price pages you can click on the page listed on this index to move there and on any page if you click on the "Free Form" or "Product" logo it will bring you back to this index. Also, if there is a reference to another page on a price list, clicking on that area will take you to that specific page.

Free Form Plastic Products, Price Page Index, Current Nov. 1/25 - Oct. 31/26

Page 2 Vertical Flat-bottom Tanks

Page 3 Vertical Cone Bottom Tanks (10°) Slope

Page 4 GEN2 Algae Prevention Vertical Flat-bottom and Cone-bottom Tanks

Page 5 Low Profile Tanks

Page 6 Low Profile Total Drain Tanks & Stand***

Page 7 Cone Stands

Page 8 Turtle Tanks, Rural Water Tanks & Various Tanks

Page 9 BANJO Products & Tank Accessories

Page 10 TATTLE systems Level Monitoring Systems

Page 11 Tank Scale Systems

Page 12 Elliptical, Auxiliary (Bourgault Sprayer Replacement) Tanks

Page 13 Portable Liquid Storage (PLS7400)

Page 14 CHEMBINE Chemical Mixer & easyFlow Jug Dispensing System

Page 15 HOT-TANK & CHEMBINE Optional Accessories & Parts

Page 16 DURA PRODUCTS Meters, Pumps & Systems

Page 17 DURA PRODUCTS Direct Injection Details

Page 18 DURA PRODUCTS DEF Meters, Pumps & Systems

Page 19 MIXSYS Dry Concentrate Blending System

Page 20 3-pt Hitch Cultivators

Page 21 Swath Rollers

Page 22 Swath Roller Application Chart

Page 23 ROTO-SHEAR Vertical Crop Cutter

Page 24 ROTO-SHEAR Vertical Crop Cutter Parts

Page 25 ROTO-SHEAR Vertical Crop Cutter Service Parts

Continued on next page

Updated: 23-Oct-2025 (R0)

Freeform PLASTICS

A Division of Bourgault Industries Ltd.

Note: For easier movement through our price pages you can click on the page listed on this index to move there and on any page if you click on the "Free Form" or "Product" logo it will bring you back to this index. Also, if there is a reference to another page on a price list, clicking on that area will take you to that specific page.

Free Form Plastic Products, Price Page Index, Current Nov. 1/25 - Oct. 31/26

Page 26 ROTO-SHEAR Vertical Crop Cutter Application Chart

Page 27 Crop Divider (for use on Sprayers, manual and Patent Pending Electric!)

Page 28 Crop Divider Application Chart

Page 29 Liquid Fertilizer Cart

Page 30 Auger Accessories (Downspouts, "No-Snag" Downspouts and Hoppers)

Page 31 H2O Fire Pro

Page 32 DIY Dock Components (typically used when building wood docks)

Page 33 Plastic Dock System (plastic dock section with aluminum connectors)

Page 34 Truck Weight Traction System

Page 35 Truck and Trailer Fenders

Page 36 Motor Grader and Backhoe Fenders

NEW PRODUCT!

NEW PRODUCT!

NEW PRODUCT!

Free Form Plastic Products, Terms and Conditions

Pricing All prices are FOB St. Brieux, SK, Canada unless otherwise specified by seasonal booking programs or sales bulletins.

Credit Qualified, pre-approved dealers will received 30 day terms unless otherwise stated on seasonal programs or sales bulletins. Interest charges applicable on all overdue accounts.

Returns All returns require pre-approval and shipped prepaid. All returns subject to a 20% restocking fee. Special orders or modified products are not eligible for return. Product must be in new condition.

Warranty Tanks have a 10 Year Pro-Rated warranty. All other manufactured products have one year. Purchased products refer to the manufacturers warranty.

Updated: 23-Oct-2025 (R0)

Freeform PLASTICS
A Division of Bourgault Industries Ltd.

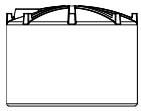

White or Black Same Price

Vertical Tank Price List – Standard Duty

CAPACITY		SPECIFICATIONS				STANDARD DUTY			
IMP. GALS.	U.S. GALS.	DIA.	HIGH	LID	STANDARD FITTING	WHITE PART No	BLACK PART No.		SUGGESTED RETAIL
5000	6000	120"	130"	21"H	3" HD	2298	2415		$4,436.64
3700	4440	104"	134"	16"H	3" HD	1332	1334		$2,954.16
2500	3000	102"	93"	16"H	3" HD	1328	1330		$2,072.16
2000	2400	102"	78"	16"H	3" HD	1324	1325		$1,754.64
1750	2100	92"	88"	16"H	3" HD	1056	1047		$1,454.40
1500	1800	102"	60"	16"H	3" HD	1425	1427		$1,383.84
1400	1680	88"	74"	16"H	3" HD	1411	1413		$1,105.92
1250	1500	88"	68"	16"H	3" HD	1407	1409		$997.92
590	708	48"	102"	12"	2" HD	26004-32	26004-33		$841.68
500	600	57"	60"	8"	2" HD	1373	1429		$567.36

Vertical Tank Price List – Heavy Duty

CAPACITY		SPECIFICATIONS				HEAVY DUTY			
IMP. GALS.	U.S. GALS.	DIA.	HIGH	LID	STANDARD FITTING	WHITE PART No	BLACK PART No.		SUGGESTED RETAIL
5000	6000	120"	130"	21"H	3" HD	2299	2416		$5,324.40
3700	4440	104"	134"	16"H	3" HD	1333	1335		$3,603.60
2500	3000	102"	93"	16"H	3" HD	1329	1331		$2,410.56
2000	2400	102"	78"	16"H	3" HD	1326	1327		$2,007.36
1750	2100	92"	88"	16"H	3" HD	1054	1053		$1,760.40
1500	1800	102"	60"	16"H	3" HD	1426	1428		$1,599.84
1400	1680	88"	74"	16"H	3" HD	1412	1414		$1,330.56
1250	1500	88"	68"	16"H	3" HD	1408	1410		$1,229.04
590	708	48"	102"	12"	2" HD	26004-34	26004-35		$1,154.88
500	600	57"	60"	8"	2" HD	1153	1430		$676.80

- **Tanks 1250 gallon and larger come with HD dome ribbing, tie-down lugs, 4-transport hooks, 16" hinged vented lid, 3" HD fitting c/w siphon tube. 2" reducers are available if needed**
- **No additional charge for black tanks. When ordering specify color, Heavy-duty or Standard-duty.**
- **Tanks carry a 10 year Pro-Rated warranty against manufacturing defects.**
- **All prices F.O.B. St. Brieux, SK.**
- **Standard-duty tanks rated at 14 lbs per gallon. Heavy-duty tanks rated at 20 lbs per gallon.**

For Tank Accessories See Page 9 or contact us!

Freeform PLASTICS
A Division of Bourgault Industries Ltd.

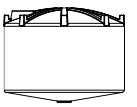

White or Black Same Price

Cone Tank (10° Slope) Price List – Standard Duty

CAPACITY		SPECIFICATIONS				STANDARD DUTY			
IMP. GALS	U.S. GALS	DIA.	HIGH	LID	STANDARD FITTING	WHITE PART No	BLACK PART No.		SUGGESTED RETAIL
3700	4440	104"	136"	16"H	3" HD	1341	1431		$2,959.20
2500	3000	102"	95"	16"H	3" HD	1342	1433		$2,072.16
2000	2400	102"	80"	16"H	3" HD	1343	1435		$1,754.64
1500	1800	102"	62"	16"H	3" HD	1400	1402		$1,324.80
1400	1680	88"	76"	16"H	3" HD	1419	1421		$1,229.04
1250	1500	88"	70"	16"H	3" HD	1415	1417		$1,144.08
62.5	75	36"	24.50"	16"	2"	26005-39	N/A		$310.32
22	26.4	22.5"	21.25"	12"	3/4"	1148	N/A		$131.04
12	14.4	19"	16.50"	12"	3/4"	1055	N/A		$111.60

Cone Tank (10° Slope) Price List – Heavy Duty

CAPACITY		SPECIFICATIONS				HEAVY DUTY			
IMP. GALS	U.S. GALS	DIA.	HIGH	LID	STANDARD FITTING	WHITE PART No	BLACK PART No.		SUGGESTED RETAIL
3700	4440	104"	136"	16"H	3" HD	1339	1432		$3,594.24
2500	3000	102"	95"	16"H	3" HD	1338	1434		$2,417.04
2000	2400	102"	80"	16"H	3" HD	1340	1436		$2,106.00
1500	1800	102"	62"	16"H	3" HD	1401	1403		$1,563.12
1400	1680	88"	76"	16"H	3" HD	1420	1422		$1,439.28
1250	1500	88"	70"	16"H	3" HD	1416	26000-14		$1,260.72
22	26.4	22.5"	21.25"	12"	3/4"	N/A	N/A	N/A	N/A
12	14.4	19"	16.50"	12"	3/4"	N/A	N/A	N/A	N/A

- **Tanks 1250 gallon and larger come with HD dome ribbing, tie-down lugs, 4-transport hooks, 16" hinged vented lid, 3" HD fitting**
- **2" reducer bushings are available if needed.**
- **No additional charge for black tanks. When ordering specify color, Heavy-duty or Standard-duty.**
- **Tanks carry a 10 year Pro-Rated warranty against manufacturing defects.**
- **All prices F.O.B. St. Brieux, SK.**
- **Standard-duty tanks rated at 14 lbs per gallon. Heavy-duty tanks rated at 20 lbs per gallon.**

For Tank Accessories See Page 9 or contact us!

Freeform PLASTICS
A Division of Bourgault Industries Ltd.

GEN2 Algae Prevention Tank

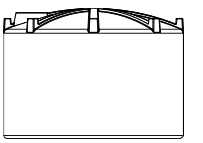

White Outside/Black Inside

Vertical Tank Price List - Generation 2

CAPACITY		SPECIFICATIONS					HEAVY DUTY
IMP. GALS.	U.S. GALS.	DIA.	HIGH	LID	STANDARD FITTING	GEN 2 PART No.		SUGGESTED RETAIL
2500	3000	102"	93"	16"H	3" HD	1798		$2,635.92
2000	2400	102"	78"	16"H	3" HD	1796		$2,136.96
1750	2100	92"	88"	16"H	3" HD	1781		$1,877.76
1500	1800	102"	60"	16"H	3" HD	1794		$1,697.04
1400	1680	88"	74"	16"H	3" HD	1576		$1,530.00
1250	1500	88"	68"	16"H	3" HD	1556		$1,396.08

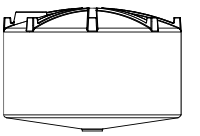

Cone Tank (10° Slope) Price List – Generation 2

CAPACITY		SPECIFICATIONS					HEAVY DUTY
IMP. GALS	U.S. GALS	DIA.	HIGH	LID	STANDARD FITTING	GEN 2 PART No.		SUGGESTED RETAIL
2500	3000	102"	95"	16"H	3" HD	1792		$2,551.68
2000	2400	102"	80"	16"H	3" HD	1790		$2,239.92
1500	1800	102"	62'	16"H	3" HD	1788		$1,680.48
1400	1680	88"	76"	16"H	3" HD	1612		$1,550.88
1250	1500	88"	70"	16"H	3" HD	1702		$1,439.28

Algae growth and contamination has always been a problem with water transport tanks. Black tanks have typically been used to overcome this problem, but because of the heat absorption of black the inherent strength of the tank was compromised making it difficult to securely fasten the tank for transport. The design staff at Free Form have developed an innovative new tank, which eliminates algae growth without sacrificing the tanks structural integrity. It appears to be a standard white tank, but the inside is black to block UV rays. These tanks are offered in the Heavy-Duty version only. These tanks come standard with a hinged lid. A sight gauge kit is available to allow the fluid level to be seen.

The **Free Form Plastics GEN 2 Tanks** are rated for liquids with densities up to 20 lbs. per gallon (Liquid fertilizers, etc. compatible) and carry a ten (10) year Pro-Rated warranty against manufacturing defects in workmanship.

For Tank Accessories See Page 9 or contact us!

Freeform PLASTICS
A Division of Bourgault Industries Ltd.

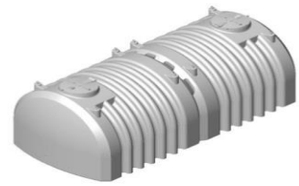

Low Profile Tank Price List

Related Patents: US 7,118,700
CDN 2,431,215

White - Heavy Duty

CAPACITY		SPECIFICATIONS					WHITE - HEAVY DUTY	
IMP. GALS.	U.S. GALS.	WIDTH	HIGH	LENGTH	LID	PART No.		SUGGESTED RETAIL
3250	3900	90"	74"	191" - Modular	21"H	2726		$6,183.36
2650	3180	92"	78"	145" - 1 Piece	16"H	3013		$4,086.72
1950	2340	92"	62"	145" - 1 Piece	16"H	2194		$2,743.92
1350	1620	78"	53"	144" - 1 Piece	16"H	1888		$2,260.80
1150	1380	88"	29"	144" - 1 Piece	21"H	26000-53		$1,884.24

Generation 2 - Heavy Duty

CAPACITY		SPECIFICATIONS					HEAVY DUTY	
IMP. GALS	U.S. GALS	WIDTH	HIGH	LENGTH	LID	PART No.		SUGGESTED RETAIL
3250	3900	90"	74"	191" - Modular	21"H	2725		$6,747.12
2650	3180	92"	78"	145" - 1 Piece	16"H	3012		$4,411.44
1950	2340	92"	62"	145" - 1 Piece	16"H	2304		$3,121.20
1350	1620	78"	53"	144" - 1 Piece	16"H	2139		$2,502.72
1150	1380	88"	29"	144" - 1 Piece	21"H	26000-54		$2,099.52

OPTIONAL ACCESSORIES	PART No.		SUGGESTED RETAIL
Hoop Kit - 3250 (steel, with powder coat paint)	26005-96		$1,414.08
Hoop Kit - 2650 (steel, with powder coat paint)	26005-17		$756.72
Hoop Kit - 1950 (steel, with powder coat paint)	26005-98		$726.48
Hoop Kit - 1350 (steel, with powder coat paint)	26006-01		$575.28
Ladder - 3250 (steel, with powder coat paint)	26005-97		$547.20
Ladder - 2650/1950 (steel, with powder coat paint)	26005-99		$547.20
Baffle Kit - 1350 (aluminum) - installation requires entering tank	2169		$587.52
Baffle Kit - 1950 (aluminum) - installation requires entering tank	2675		$1,293.12
Baffle Kit - 2650 (aluminum) - installation requires entering tank	2947		$1,361.52

- Rated for liquids with densities up to 20 lbs per gal.
- Heavy-duty Bulldog hinged lids are standard on the 3250 size
- All tanks come standard with 4-loading/unloading hooks, siphon tube, hinged vented lid
- 3" HD bulkhead fitting is standard & 2" reducers are available as required
- Extreme ribbing and heavy-duty design to eliminate the need for steel support hoops
- Large ribs act as baffles to reduce the amount of sloshing
- Domed shaped ends for added strength plus this design reduces end-to-end sloshing
- Tanks carry a 10 year Pro-Rated warranty against manufacturing defects

NEW! Low Profile Total Drain Tanks See Page 6 or contact us!

Freeform PLASTICS
A Division of Bourgault Industries Ltd.

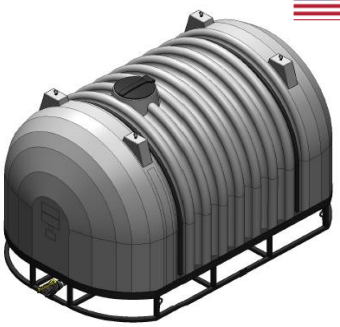

Low Profile Total Drain Tank Price List

Related Patents: US 7,118,700
CDN 2,431,215

White - Heavy Duty

CAPACITY		SPECIFICATIONS					WHITE - HEAVY DUTY	
IMP. GALS.	U.S. GALS.	WIDTH	HIGH	LENGTH	LID	PART No.		SUGGESTED RETAIL
2650	3180	92"	78"	145" - 1 Piece	16"H	26005-28		$4,086.72
1950	2340	92"	62"	145" - 1 Piece	16"H	26005-32		$2,743.92

*these tanks require Total Drain Low Profile Tank Cone Stand below

Generation 2 - Heavy Duty

CAPACITY		SPECIFICATIONS					HEAVY DUTY	
IMP. GALS	U.S. GALS	WIDTH	HIGH	LENGTH	LID	PART No.		SUGGESTED RETAIL
2650	3180	92"	78"	145" - 1 Piece	16"H	26005-30		$4,411.44
1950	2340	92"	62"	145" - 1 Piece	16"H	26005-34		$3,121.20

*these tanks require Total Drain Low Profile Tank Cone Stand below

Low Profile Total Drain Tank Stand

CAPACITY		SPECIFICATIONS					HEAVY DUTY	
IMP. GALS	U.S. GALS	WIDTH	HIGH	LENGTH	WEIGHT LBS	PART No.		SUGGESTED RETAIL
2650/1950	3180/2340	92-5/8"	13-1/2"	146-3/8"	1,100	26005-16		$4,589.28

Tank & Cone Stand Accessories	PART No.		SUGGESTED RETAIL
Hoop Kit - 2650 (steel, with powder coat paint)	26005-17		$756.72
Hoop Kit - 1950 (steel, with powder coat paint)	26005-98		$726.48
Ladder - 2650/1950 (steel, with powder coat paint)(mounts on end of tank)	26006-44		$547.20
Baffle Kit - 1950 (aluminum) - installation requires entering tank	2675		$1,293.12
Baffle Kit - 2650 (aluminum) - installation requires entering tank	2947		$1,361.52
3" Plumbing kit for Low Profile Total Drain Tank Cone Stand	26005-49		$336.24

For Tank Accessories See Page 9 or contact us!

Freeform PLASTICS
A Division of Bourgault Industries Ltd.

Cone Stand Price List

Transportable - Cone Stand

Suitable for transport of liquids and compatible with all cone tanks at 10° slope. Painted BLACK.

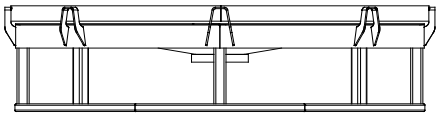

DIAMETER	HEIGHT	CLEARANCE	WEIGHT-LBS.		RETAIL	PART NUMBER
102"	23-1/2"	8-13/16"	854		$3,973.68	26004-09
88"	22"	8"	576		$3,160.80	26004-10

Stationary - Cone Stand

Suitable for stationary storage and compatible with all cone tanks with 10° slope. Painted BLACK.

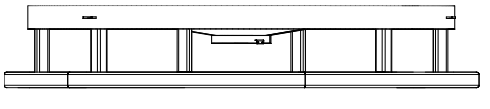

DIAMETER	HEIGHT	CLEARANCE	WEIGHT-LBS.		RETAIL	PART NUMBER
101"	18-11/16"	8-13/16"	724		$3,196.08	26004-11
88"	16 ½"	8"	463		$2,477.52	26004-12

Cone Tank - Transport Cradle

Used in the fabrication of Liquid Carts, portable tank stands. C/W tie down hooks. Unpainted

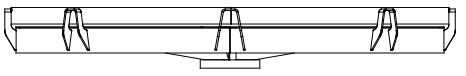

DIAMETER	HEIGHT	WEIGHT-LBS.		RETAIL	PART NUMBER
102"	14 ½"	600		$1,959.12	1221
88"	14"	400		$1,635.84	1691

Cone Tank - Stationary Cradle

For those who would choose to build custom tank stands for stationary storage. Unpainted

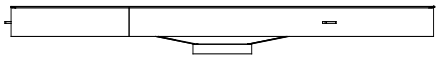

DIAMETER	HEIGHT	WEIGHT-LBS.		RETAIL	PART NUMBER
102"	10"	480		$1,404.00	1285
88"	9"	375		$1,033.92	1368

Cone Tank Stand & Cradle Accessories

Optional 2" plumbing kit for 101"		$264.96	1772
Optional 3" plumbing kit for 101"		$435.60	1596
Optional 2" plumbing kit for 88"		$264.96	1771
Optional 3" plumbing kit for 88"		$435.60	1773
Strap 2" c/w metal plate (for use on tanks)*		$37.44	7900-26-01
Ratchet Tank Tie Down (for use on tanks)*		$37.44	8059-67

***Note: These items are included with the stands when ordered with tanks**

For Tank Accessories See Page 9 or contact us!

Freeform PLASTICS
A Division of Bourgault Industries Ltd.

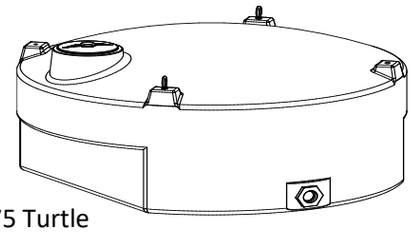

175 Turtle

White or Black Same Price

Turtle Tank Price List

Related Patents: CDN 2,361,945

CAPACITY		SPECIFICATIONS					STANDARD DUTY			
IMP. GALS	U.S. GALS	DIA.	WIDTH	HIGH	LID	STANDARD FITTING	WHITE PART No	BLACK PART No		SUGGESTED RETAIL
350	420	57"	N/A	43-5/16	8"	2"	26005-50	26005-52		$490.32
250	300	57"	N/A	32-5/16	8"	2"	1139	1356		$395.28
175	210	57"	N/A	24-5/16	8"	2"	1018	1357		$321.12

200 Short Rural Water Tank

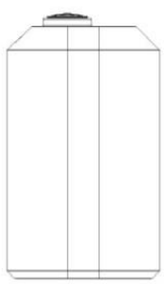

360 Rural Water Tank

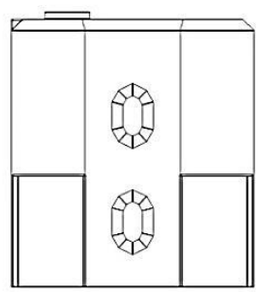

Rural Water & Various Tanks Price List

CAPACITY		SPECIFICATIONS					STANDARD DUTY			
IMP. GALS.	U.S. GALS.	DIA.	WIDTH	HIGH	LID	STANDARD FITTING	WHITE PART No	BLACK PART No		SUGGESTED RETAIL
360	432	30"	65"	74"	8"	1-1/4"	2168	26001-41		$680.40
280	336	30"	49"	72"	8"	1-1/4"	26005-79	26005-80		$481.68
200Short	240	30"	38"	66"	8"	1-1/4"	1070	5256		$326.16
200Tall	240	28"	34"	74"	15"	1-1/4"	2950	26002-75		$353.52
165	198	28"	34"	60"	15"	1-1/4"	2727	26000-95		$288.00
100	120	22"	N/A	78"	8"	1-1/4"	1069	26001-39		$226.08
83.3	100	30"	48"	30"	8"	3/4"	26001-30	CALL		$379.44
14	16.8	15"	20 3/4"	21"	6"	1-1/4"	CALL	1118		$106.56
****Rural Water Drip Tray, pn# 1667, outside is 42" x 34" x 4" c/w 3/8" drain on end and side***										$72.72

- Tanks 175, 250 & 350 gallon come with tie-down lugs, 4-transport hooks, 8" vented lid, 2” Banjo HD fitting, a 2” siphon tube & plug. As well, they come with the patented built in lifting handles.
- No additional charge for black tanks. When ordering specify color, Heavy-duty or Standard-duty.
- Tanks carry a 10 year Pro-Rated warranty against manufacturing defects.
- All prices F.O.B. St. Brieux, SK.
- Standard-duty tanks rated at 14 lbs per gallon. Heavy-duty tanks rated at 20 lbs per gallon.

For Tank Accessories See Page 9 or contact us!

Freeform PLASTICS
A Division of Bourgault Industries Ltd.

For any **Banjo** components you find in their printed catalogue or online, let us know so we can supply.
For a complete list of Banjo pricing contact us
www.banjocorp.com

Tank Accessory Price List

ACCESSORIES	PART NUMBER		SUGGESTED RETAIL
1" Kanaflex Hose CW Black Helix (per foot)	5505-51B		$1.91
1" Stainless Steel T-Bolt Clamp (TC120)	*TC120*		*$7.64*
2" Kanaflex Hose CW Black Helix (per foot)	5505-45		$10.34
2" Stainless Steel T-Bolt Clamp (TC250)	*TC250*		*$8.89*
3" Kanaflex Hose CW Black Helix (per foot)	5506-23		$12.61
3" Stainless Steel T-Bolt Clamp (TC343)	*TC343*		*$8.63*
Bulkhead Fitting FPT 2" in lieu of 3" – (3 1/4" Hole)	2849		-$29.52
Bulkhead HD Banjo 1/2" – (1 5/8" Hole)	*TF050*		*$10.28*
Bulkhead HD Banjo 3/4" – (1 5/8" Hole)	*TF075*		*$10.28*
Bulkhead HD Banjo 1" – (2-1/4" Hole)	*TF100*		*$12.32*
Bulkhead HD Banjo 1-1/4" – (2-1/4" Hole)	*TF125*		*$14.38*
Bulkhead HD Banjo 1-1/2" – (3" Hole)	*TF150*		*$20.64*
Bulkhead HD Banjo 2" – (3 1/4" Hole)	*TF220*		*$28.05*
Bulkhead HD 3" – (4½" Hole)	*TF300*		*$47.22*
Bulkhead HD 3"c/w Siphon tube & Reducer – (4½" Hole)	1228		$61.20
Bulkhead Bolted SS 3"	26005-43		$258.45
Bulkhead Bolted SS 4"	26005-44		$316.99
Reducer Bushing 3" MNPT X 2" FPT	*RB300-200*		*$16.14*
Lid 8" Vented c/w rim	1103		$31.00
Lid 12" Vented c/w rim	2131		$35.42
Lid 15" Vented c/w rim	1113		$44.28
Lid 16" Vented SD Hinged	2603		$50.93
Lid 16" Vented HD hinged "Bulldog"	1553		$92.42
Lid 21" Vented c/w 4" Breather & Rim	1646		$81.66
Lid 22" Vented HD hinged "Bulldog"	2343		$187.27
Upgrade to 16" HD hinged lid "Bulldog"	1537		$50.40
Upgrade to 16" HD hinged lid "Bulldog" c/w plug & Vent Kit	26005-21		$123.15
Upgrade to 22" HD hinged lid "Bulldog"	2344		$56.64
Sight Tube Kit Assembly (3/8" NPT c/w 3/8" Tubing) fits all tanks	1275		$35.28
Sight Tube Kit Assembly - Retro Fit (1/2" Bulkheads c/w 1/2" Tubing)	2625		$77.76
Manual Float Valve Assembly - 3/4" NPT	2192		$76.32
Optional drip tray for 200 gallon rural water tank.	1667		$72.72
Plastic Repair Kit (Weld, includes instructions and White & Black)	2935		$33.12
Strap 2" c/w with metal plate (for use on tanks)	7900-26-01		$37.44
Ratchet Tank Tie Down (for use on tanks)	8059-67		$37.44
Banjo Valve 2" c/w male camlock x male NPT	*VFMT204FP*		*$80.71*
Banjo Valve 3" Full Port Stubby c/w male camlock x male NPT	*VSFMT300FP*		*$185.48*

Tattle Systems Price List

Fuel Monitoring (Gasoline or Diesel with a Mechanical Float system)

DESCRIPTION (all components below required per tank)	PART NUMBER		SUGGESTED RETAIL
Fuel Tattle Gauge, Spec 30, LTE	FLG-T3L-S30-ST-S-MG		$264.96
Fuel Sensor Gauge Sr, 2in, Conf30, 1.8m length	FLG-DSR-E-C30-1.8		$80.64
Float Arm, 48in, Gear Action, Top Mount, w 2in NPT	FA-H48-DSR-GA-T-2ZN		$149.04
Add per float, 1 Bolt Circle Adaptor, 1 Seals & Screws			
*Note: if tank is larger than 48" use pressure sensor version			

Fuel Monitoring (Gasoline or Diesel with a Pressure Sensor system)

DESCRIPTION (1 Tattle & 1 sensor required per tank)	PART NUMBER		SUGGESTED RETAIL
Fuel Tattle, Spec 30, LTE	FL-T3L-S30-ST-S-MG		$699.12
Fuel Sensor 05 - 0-5 psi, 5m length	203315LF		$1,170.72
Fuel Sensor 10 - 0-15psi, 15m length	2033110LF		$1,190.88
Fuel Sensor 15 - 0-25psi, 15m length	2033115LF		$1,213.92
Diesel Sensor 05 - 0-10psi, 6m length	DF-P10-S-C30-6-F1		$455.04
Diesel Sensor 10 - 0-15psi, 11m length	DF-P15-S-C30-11-F1		$635.76

Liquid Monitoring (Water or Septic or other with a Pressure Sensor system)

DESCRIPTION (1 Tattle & 1 sensor required per tank)	PART NUMBER		SUGGESTED RETAIL
Liquid Tattle, Spec 30, LTE (Solar Panel option)	LQ-T3L-S30-ST-S-BR		$699.12
Liquid Tattle Lite, Spec 32, LTE (Hardwired Option)*	LQL-T3L-S32-ST-E-BR		$331.20
Liquid Sensor 05 - 0-10 psi, 6m length	LQ-P10-S-C30-6-F2		$455.04
Septic Sensor 10 - 0-15psi, 10m length	2023S110		$737.28
*Power Cable, AC Adapter, 7.5vdc, 3m	PC-7.5V-2P-AC-3		$143.28

Septic Monitoring (Septic Combo with a Pressure Sensor system)

DESCRIPTION (Combos come with 1 Tattle & 1 sensor)	PART NUMBER		SUGGESTED RETAIL
Liquid Tattle, Septic Combo, LTE, 6m length (Solar Panel option)	C-SP-T3L-P15-S30-10		$610.56
Liquid Tattle Lite, Septic Combo, LTE, 10m length (Hardwired Option)*	C-SP-T3L-P15-S32-10		$610.56

MONTHLY SERVICE FEE

TSA: Tattle Systems Access is $189.00 annually per Tattle, Pro-Rated in year 1

*NOTE: The above TSA is billed directly from North Star Systems

Freeform PLASTICS
A Division of Bourgault Industries Ltd.

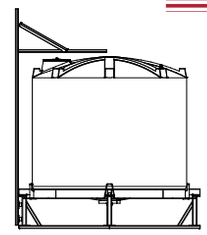

Tank Scale Price List

Package 1 - Base Assembly

	DIAMETER	HEIGHT	WEIGHT	PART NUMBER		SUGGESTED RETAIL
Base assembly less tank and load cells	102"	154"	1330	1842		$5,826.96

Package 2 - Cone Bottom Tanks

	IMP. GALS	U.S. GAL	DIAMETER	HEIGHT	WEIGHT	PART NUMBER		SUGGESTED RETAIL
2500 Scale tank - Heavy Duty	2500	3000	102"	95"	600	1853		$2,417.04
2000 Scale tank - Heavy Duty	2000	2400	102"	80"	500	1852		$2,106.00
1500 Scale tank - Heavy Duty	1500	1800	102"	62"	350	1851		$1,563.12

Package 3 - Tank Scale Completion Package

	PART NUMBER		SUGGESTED RETAIL
Includes 4 load cells, junction box and digital weigh indicator	1365		$7,338.24

Individual Components

Individual Components	PART NUMBER		SUGGESTED RETAIL
Stainless steel load cell rated for 10,000 pound capacity	1755		$1,146.96
Stainless steel 4-cell junction box	1767		$766.08
Stainless steel 3-channel digital weigh indicator	1754		$2,330.64

Tank Scale Calibration and Certification

Contact Free Form Plastics for quote.

Features and Benefits:

- **Completely welded seams to prevent corrosion.**
- **Digital weigh indicator can be connected to a printer or remote display.**
- **Standard 3" outlet fitting complete with anti-vortex to prevent pump cavitation.**
- **Common frame for all models allows the unit to be upgraded by changing the tank.**
- **Tanks securely held in place with adjustable nylon straps with ratchets for ease of adjustment.**
- **Cone bottom tanks have an optimum 10° slope to offer greater stability, lower heights and complete drainage**

For Tank Accessories See Page 9 or contact us!

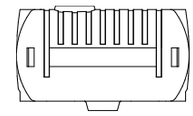

Elliptical Tank Price List

CAPACITY		SPECIFICATIONS					STANDARD DUTY		HEAVY DUTY	
IMP. GALS.	U.S. GALS.	WIDTH	HIGH	LENGTH	STANDARD FITTING	PART NUMBER	DEALER REFERENCE	SUGGESTED RETAIL		SUGGESTED RETAIL
1600	1920	91"	87"	89"	BLANK	1089	N/A	N/A		$3,012.48
833	1000	79"	52"	90"	BLANK	1039		$1,964.16	N/A	N/A
540	648	60"	46"	90"	BLANK	1154		$1,492.56	N/A	N/A

Saddle available for the 1600 gal tank (P/N#7910-15)
Saddle available for the 833 gal tank (P/N#8057-94)(sold in halves, 2 req'd)
Saddle available for the 540 gal tank (P/N#8100-01-12)

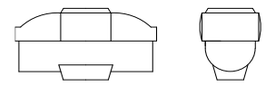

Auxiliary Sprayer Tank Price List

CAPACITY		SPECIFICATIONS					STANDARD DUTY		HEAVY DUTY	
IMP. GALS.	U.S. GALS.	WIDTH	HIGH	LENGTH	STANDARD FITTING	PART NUMBER	DEALER REFERENCE	SUGGESTED RETAIL		SUGGESTED RETAIL
200	240	27-3/8"	45-3/4"	77-11/16"	2" HD	1179	N/A	N/A		$864.00
175	210	27-3/8"	43"	63-1/2"	2" HD	1036	N/A	N/A		$724.32
125	150	27-3/8"	30-9/16'	63-1/2"	2" HD	1035	N/A	N/A		$669.60

NOTE:

- 1600 Gallon sprayer tank available in heavy duty only
- All tanks come complete with 16" vented lid
- These tanks are supplied with gallonage decals that are uninstalled
- No Bourgault Side Decals are supplied with these tanks
- No bulkheads are drilled or installed in this tank

Bourgault Model's that the above elliptical tanks will fit. Supplied without decals.

Convertabar SI	833	Exterminator	833
Convertabar SII	833		
540 Versabar	833 or 540	Eliminator 540	540
		Eliminator 950	833
Centurion I	833	Eliminator 1450	1250*
Centurion II	833	Eliminator 1460	1250*
Centurion III	833	Eliminator 1850	1600
		LFC2000 Liquid Cart	1600

***NOTE** : 1250 Imperial Gallon tank available through Bourgault Industries Ltd. only.*

For Tank Accessories See Page 9 or contact us!

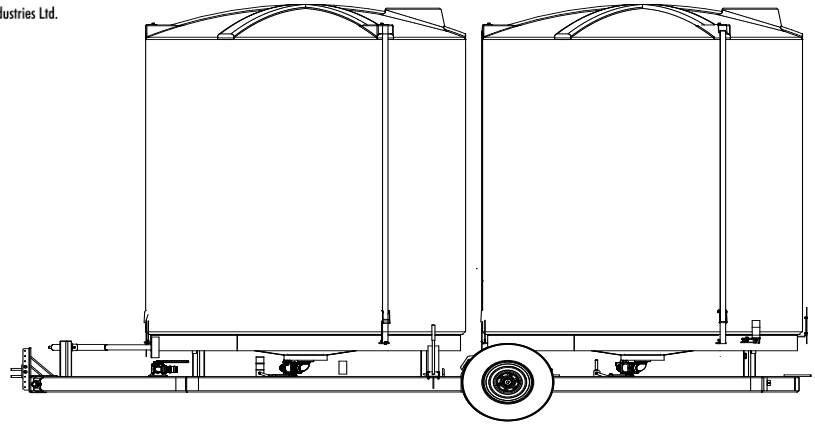

Portable Liquid Storage Price List

SPECIFICATIONS								SUGGESTED
Model	**Tank Color**	**Capacity - IMP/US**	**Length**	**Width**	**Height**	**Part No.**		**RETAIL**
PLS-7400	Trans White	7400/8880	260"	104"	162"	1337		$21,276.00
PLS-7400	Black	7400/8880	260"	104"	162"	26006-39		$21,276.00
PLS-5000	Trans White	5000/6000	260"	104"	122"	1642		$19,592.64
PLS-5000	Black	5000/6000	260"	104"	122"	26006-52		$19,592.64

**Field Ready units above come with the Transport Light Package and 3" Banjo Plumbing Package*

OPTIONAL			
6.5 HP Honda c/w Banjo Wetseal Pump, recirc plumbing	26006-40		$2,473.92
13 HP Honda Elec Start c/w Banjo Wetseal Pump, recirc plumbing	26006-41		$3,617.28
Pintle Hitch	1641		$97.92
2-5/16 Ball Socket Hitch	26004-47		$172.80

Features:

Largest unit will hold an entire B-Train load of Liquid Fertilizer.
Tanks are rated for liquid up to 20 Lbs. per gallon.
Tanks have an optimum 10° cone bottom for complete drainage.
Adjustable tongue height and optional hitches available.
Minimal trailer tongue weight allows unit to be easily towed by a variety of vehicles.
Single load and unload port with remote access to valves on both tanks.
Completely plumbed with Banjo Fittings for years of trouble free service.
Shield to protect main valve from damage due to road debris.
Tires are rated for highway speed. (11L x 15" DOT, Good Year Farm and Highway Service.)
Self-contained hydraulic system for lifting and lowering unit.

CHEMBINE

FREE FORM PLASTICS - A DIVISION OF BOURGAULT INDUSTRIES - MADE IN CANADA

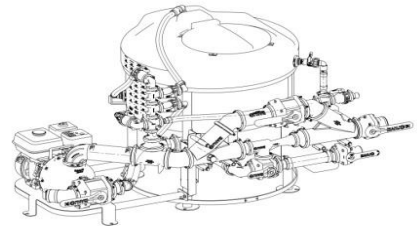

CHEMBINE - Chemical Mixer Price List

CLICK on the images to check out the ***Chembine video***

CHEMBINE Packages - 75 us gallon (62.5 Imperial, 284 Litres)			
DESCRIPTION	PART NUMBER		SUGGESTED RETAIL
CHEMBINE - 2" Complete mixing unit w/o engine, pump, recirculation kit	26003-83		$2,842.56
CHEMBINE - 2" Complete, 5.5 HP Honda/Banjo WET SEAL pump/mounting/recirculation kit	26003-85		$4,842.00
CHEMBINE - 3" Complete mixing unit w/o engine, pump, recirculation kit	26002-42		$3,663.36
CHEMBINE - 3" Complete, 6.5 HP Honda/Banjo WET SEAL pump/mounting/recirculation kit	26002-58		$6,032.16
CHEMBINE - 3" Complete, 13 HP ES Honda/Hypro pump/mounting/recirculation kit	26003-63		$7,439.04
CHEMBINE - 3" Complete, 13 HP ES Honda/Banjo WET SEAL pump/mounting/recirculation kit	26004-61		$7,439.04

Chembine videos are available on You Tube CLICK on the images above to Watch!

easyFlow - Jug Discpensing System			
DESCRIPTION	PART NUMBER		SUGGESTED RETAIL
EASYFLOW Tank Adaptor jug dispensing system (installs on Chembine plus other applications)	26003-51		$435.60
EASYFLOW Container (jug) Adaptor (63 mm, fits most jugs. Is required to fit with above)	26003-52		$128.88
EASYFLOW Wedge Plate Kit - only required when mounting on no-level applications	26003-61		$20.88
EASYFLOW Plumbing - Rinse hose assembly to connect to Chembine (not required on M version)	26004-01		$101.52
EASYFLOW M jug dispensing system (installs on Chembine Expansion Assembly or bolt down)	26004-56		$2,019.60

CLICK on the image to check out the new ***EasyFlow jug dispensing system*** or visit www.freeformplastics.com for more information

Chembine c/w 6.5 hp Motor/Pump
P/N# 26002-58

Chembine c/w 5.5 hp motor/pump
P/N# 26003-85

easyFlow M Dispensing System

CLICK on the images to check out the ***Chembine video***

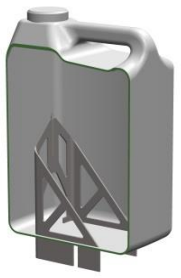

CHEMBINE

FREE FORM PLASTICS - A DIVISION OF BOURGAULT INDUSTRIES - MADE IN CANADA

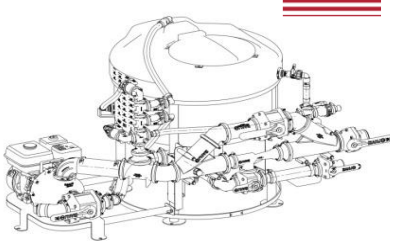

HOT-TANK - Price List
CHEMBINE Optional Accessories & Parts - Price List

CHEMBINE HOT-TANK. 1400 Imp. (1680 us) Gallon cone bottom tank/stand chemical mix system			
DESCRIPTION (Measures 92.5" wide x 99" deep x 98.25" high and weighs 825 lbs)	**PART NUMBER**		**SUGGESTED RETAIL**
Tank Batching System - 4 eductor nozzles, antivortex, vented, rotary rinse, valves	26003-27		$6,891.84
Chembine to Hot-Tank System Plumbing (c/w 40' of 3" hose, valves, camlocks)	26003-69		$1,703.52

Tank Batching System - designed to mix your product(s) in large quantities to reduce mix times therefore increasing productivity. Mixer has a 1400 Imp (1680 us) gal capacity. Comes with a black colored cone bottom HD stand, green colored cone bottom tank, straps, 4 eductor nozzles in the bottom for mixing/agitation, antivortex bottom fitting, additional vent at the top, and 2 rotary rinse nozzles in the top for cleanout. Supplied with the valves and hoses to operate the nozzles, rinse, bottom fill and drain system. Dimensions 92-1/4" long x 99" deep x 98-1/2" tall

Chembine videos are available on You Tube CLICK on the images above to Watch!

CHEMBINE Optional Accessories			
DESCRIPTION	**PART NUMBER**		**SUGGESTED RETAIL**
Expansion kit. 3 -1" tote con./1" Banjo flow meter/frame. Mounts to all models	26004-58		$1,922.40
Expansion kit. 3 -1" tote con./1" Dura-Meter flow meter/frame. Mounts to all models	26004-57		$1,382.40
Expansion kit. 3 -1" tote con./1" Macnaught flow meter/frame. Mounts to all models	26004-71		$2,221.20
Expansion kit. 3 -1" tote connections/no flow meter/frame. Mounts to all models	26004-55		$1,031.04
Chemical Tote Flush Hose Assembly (2" to 1")	26002-78		$67.68
Remote Throttle Kit (can be added to any of the motors for operation from the front)	26003-66		$56.88
2" Pump Pkg only c/w 5.5 HP Honda & **WET SEAL** Banjo pump, recirculation & mount kits	26004-60		$2,164.32
3" Pump Pkg only c/w 6.5 HP Honda & **WET SEAL** Banjo pump, recirculation & mount kits	26004-19		$2,471.76
3" Pump Pkg only c/w 13 HP ES Honda, **WET SEAL** Banjo pump, recirculation & mount kits	26004-59		$3,939.84

CHEMBINE Parts			
DESCRIPTION	**PART NUMBER**		**SUGGESTED RETAIL**
CHEMBINE Patent Pending SS Knife Assembly	26005-63		$621.36
Banjo WET SEAL Pump c/w 5.5 HP Honda Only	M220PH6W		$1,667.29
Banjo WET SEAL Pump c/w 6.5 HP Honda Only	M300PH6W		$1,883.72
Banjo WET SEAL Pump c/w 13 HP ES Honda Only	M350PH13W		$3,384.36
Bracket for pumps (painted)(fits new frames with bent feet)	26004-19-01		$168.48
Valve Stubby 3" FP Manifold	MVSF300FP		$183.42
Educator Nozzle (3/4" MPT)	26002-19		$100.08
Rotary Tank Rinse (3/4" MPT)	26003-16		$89.28
1" Kanaflex Hose CW Black Helix (per foot)	5505-51B		$1.91
1" Stainless Steel T-Bolt Clamp (TC120)	TC120		$7.64
2" Kanaflex Hose CW Black Helix (per foot)	5505-45		$10.34
2" Stainless Steel T-Bolt Clamp (TC250)	TC250		$8.89
3" Kanaflex Hose CW Black Helix (per foot)	5506-23		$12.61
3" Stainless Steel T-Bolt Clamp (TC343)	TC343		$8.63
Banjo 1" Full Port Manifold Flow Meter	MFM100		$1,042.22
Banjo 2" Full Port Manifold Flow Meter	MFM220		$1,184.22
Banjo 3" Full Port Manifold Flow Meter	MFM300		$1,486.23
Macnaught 1" Flow Meter	MX25F-2SD		$1,452.30
Dura-Meter Calibration Kit - makes calibrating the meter easier	26006-05		$83.52
Chembine Knife Sharpener	26003-22		$8.37

DURA PRODUCTS
Technology with Lasting Value

Dura-Meter & Dura-Meter with Auto-Batch	**MSRP**
P/N# DP-3000V (1" Standard meter, c/w Viton seals)	$530.65
P/N# DPAB-12V (1" Auto-Batch, 12 vDC, c/w Viton seals)	$1,390.39
P/N# DPAB-15V (1" Auto-Batch, 110 vAC, c/w Viton seals)	$1,390.39
P/N# DP-HFM2V (2" High-Flow meter, c/w Viton seals)	$1,534.37
P/N# DPAB-HFM2V (2" High-Flow Auto-Batch, c/w Viton seals)	$3,455.41
P/N# DP-HFM3V (3" High-Flow meter, c/w Viton seals)	$1,927.21
P/N# DPAB-HFM3V (3" High-Flow Auto-Batch, c/w Viton seals)	$4,146.49

Dura-Pump	**MSRP**
P/N# DP-6018V-12 (12 vDC c/w Viton seals)	$1,178.54
P/N# DP-6018V-110 (110 vAC c/w Viton seals)	$1,293.72
P/N# DP-P6017A-V (Cartridge Kit c/w Viton seals)	$341.43

Dura-ABV Auto-Batch 1" Meter "Automation Made Easy"	**MSRP**
P/N# Dura-ABV-B (12 vDC, c/w Viton seals & Banjo EVX connector)	$1,390.39
P/N# DP-ABV-MEVX-CK (1" NPT to Banjo manifold adaptor kit)	$37.02
P/N# MEVX100B (Banjo 1" manifold ball valve, 12 vDC)	$493.91
P/N# DP-ABV-MEVX-AU (Complete Assembly)	***$1,921.32***

Dura-ABV Auto-Batch High-Flow System (2" & 3")	**MSRP**
P/N#DPAB-HFM2KITV (12 vDC, c/w Viton seals & Banjo EVX valve)	$4,952.75
P/N#DPAB-HFM3KITV (12 vDC, c/w Viton seals & Banjo EVX valve)	$6,908.76

Dura-Pump Easy Caddy	**MSRP**
P/N# DPE-6018V-12 (NO METER, 12 vDC c/w Viton seals)	$1,378.05
P/N# DPE-6018V-110 (NO METER, 110 vAC c/w Viton seals)	$1,499.40
P/N# DPEM-6318V-12 (WITH METER, 12 vDC c/w Viton seals)	$1,910.76
P/N# DPEM-6318V-110 (WITH METER, 110 vAC c/w Viton seals)	$2,023.88
P/N# DPEM-6618NV-12 (WITH METER, 12' XLPE discharge hose, 5' XLPE suction hose, 12 vDC c/w Viton seals)	$2,768.44
P/N# DPEM-6618NV-110 (WITH METER, 12' XLPE discharge hose, 5' XLPE suction hose, 115 vDC c/w Viton seals)	$2,900.08

Dura-ABS Auto-Batch System (Easy Caddy)	**MSRP**
P/N# DPABS-6318V-12 (Auto-Batch Meter, 12 vDC c/w Viton seals)	$2,649.15
P/N# DPABS-6318V-110 (Auto-Batch Meter, 110 vAC c/w Viton seals)	$2,768.44

Drone Fill Kits - Note: c/w Key Fob on 12 volt model	**MSRP**
P/N# DPDRONE6018V12 (No Meter, 12 vDC c/w Viton seals)	$2,046.51
P/N# DPDRONE6018V110 (No Meter, 110 vAC c/w Viton seals)	$2,137.01
P/N# DP-N4005 Optional Auto-Nozzle (3/4" Stainless Steel)	$306.46

**above kits come with 3/4" x 5' suction & 3/4" x 20' discharge hoses*

DURA PRODUCTS
Technology with Lasting Value

Dura-Pump Direct Injection System c/w Frame

The latest innovation in chemical mixing providing the accuracy you want with the simplicity and dependability you expect!

This system is easily added to any pump setup even with venturi's.
Allows you to Directly Inject up to four chemicals at the same time while loading your sprayer and doing other tasks.

Dura-Pump Direct Injection System c/w Frame	**MSRP**
P/N# DPABS-DI2-1 (Dura-AB Direct Injection 2" System, 12 vDC c/w Viton seals, 1 tote)	$4,861.93
P/N# DPABS-DI2-2 (Dura-AB Direct Injection 2" System, 12 vDC c/w Viton seals, 2 tote)	$7,838.10
P/N# DPABS-DI2-3 (Dura-AB Direct Injection 2" System, 12 vDC c/w Viton seals, 3 tote)	$10,814.28
P/N# DPABS-DI2-4 (Dura-AB Direct Injection 2" System, 12 vDC c/w Viton seals, 4 tote)	$13,790.46
P/N# DPABS-DI3-1 (Dura-AB Direct Injection 3" System, 12 vDC c/w Viton seals, 1 tote)	$5,141.65
P/N# DPABS-DI3-2 (Dura-AB Direct Injection 3" System, 12 vDC c/w Viton seals, 2 tote)	$8,247.40
P/N# DPABS-DI3-3 (Dura-AB Direct Injection 3" System, 12 vDC c/w Viton seals, 3 tote)	$11,353.16
P/N# DPABS-DI3-4 (Dura-AB Direct Injection 3" System, 12 vDC c/w Viton seals, 4 tote)	$14,458.91

These units are made up of 4 part numbers that you may be stocking already

2" Direct Injection System from 2 to 4 totes

			EXT MSRP
P/N# DPABS-DI2-2 (Dura-AB Direct Injection 2" System, 12 vDC c/w Viton seals, 2 tote)			$7,838.10
Qty Req'd: ***(the qty of 2 would change to 3 or 4 depending on how many totes you want to run)***		**MSRP**	**EXT MSRP**
2	P/N# DPABS-6318V-12 (Dura-ABS Auto Batch System, 12 vDC c/w Viton seals	$2,649.15	$5,298.29
2	P/N# DPABS-DI-2INAK (Dura ABS Direct Injection Sys 2" Accessory Kit)	$327.03	$654.06
1	P/N# DPABS-DI-2INGK (Dura ABS Direct Injection Sys 2" Gauge Kit)	$224.19	$224.19
1	P/N# DP-P4040 DI (Dura ABS Direct Injection Metal Rack)	$1,661.56	$1,661.56
			$7,838.10

3" Direct Injection System from 2 to 4 totes

			EXT MSRP
P/N# DPABS-DI3-2 (Dura-AB Direct Injection 3" System, 12 vDC c/w Viton seals, 2 tote)			$8,247.40
Qty Req'd: ***(the qty of 2 would change to 3 or 4 depending on how many totes you want to run)***		**MSRP**	**EXT MSRP**
2	P/N# DPABS-6318V-12 (Dura-ABS Auto Batch System, 12 vDC c/w Viton seals	$2,649.15	$5,298.29
2	P/N# DPABS-DI-3INAK (Dura ABS Direct Injection Sys 3" Accessory Kit)	$456.61	$913.22
1	P/N# DPABS-DI-3INGK (Dura ABS Direct Injection Sys 3" Gauge Kit)	$374.34	$374.34
1	P/N# DP-P4040 DI (Dura ABS Direct Injection Metal Rack)	$1,661.56	$1,661.56
			$8,247.40

DURA PRODUCTS
Technology with Lasting Value

DEF Products

DEF Dura-Meter	**MSRP**
P/N# DP-3000D (1" Standard DEF meter, c/w EPDM seals)	$514.20

DEF Dura-Pump	**MSRP**
P/N# DEF-6018E-12 (12 vDC c/w EPDM seals)	$1,170.31
P/N# DEF-6018E-110 (110 vAC c/w EPDM seals)	$1,201.17
P/N# DP-P6017A-E (Cartridge Kit c/w EPDM seals)	$320.86

DEF Dura-Pump Easy Caddy - Top Suction (RPV type valves)	**MSRP**
P/N# DEFE-6518AE-12 (NO METER, 3/4" x 18' discharge hose, 3/4" x 1.5' suction hose, 12 vDC c/w EPDM seals, Auto-nozzle)	$1,602.24
P/N# DEFE-6518AE-110 (NO METER, 3/4" x 18' discharge hose, 3/4" x 1.5' suction hose, 110 vAC c/w EPDM seals, Auto-nozzle)	$1,635.15

**add DEF Dura-Meter P/N#DP-3000D to above if required*

DEF Dura-Pump Top Unload - Top Mount	**MSRP**
P/N# DEFT-6018AE-12 (NO METER, 3/4" x 18' discharge hose, 1" telescoping downtube, 12 vDC c/w EPDM seals, Auto-nozzle)	$1,386.28
P/N# DEFT-6018AE-110 (NO METER, 3/4" x 18' discharge hose, 1" telescoping downtube, 110 vAC c/w EPDM seals, Auto-nozzle)	$1,425.36

**add DEF Dura-Meter P/N#DP-3000D to above if required*

Freeform PLASTICS
A Division of Bourgault Industries Ltd.

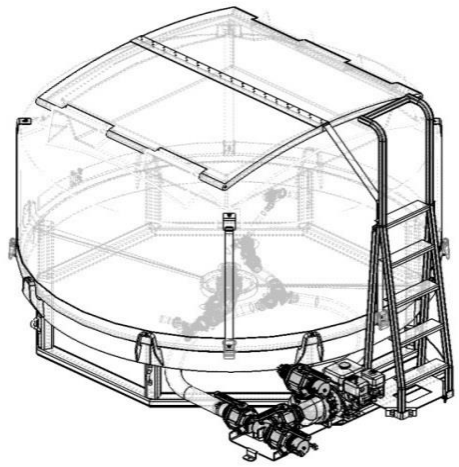

MIXSYS

Dry Concentrate Blending System Price List

CAPACITY		SPECIFICATIONS				White	Black		SUGGESTED
Imp Gal	US Gal	Motor/Pump Combo	Length	Width	Height	Part No.	Part No.		RETAIL
1500	1800	**Honda 6.5 hp, Banjo Wet Seal Pump**	123"	104"	86"	2885	26006-69		$ 12,196.08
2000	2400	**Honda 6.5 hp, Banjo Wet Seal Pump**	123"	104"	91	26005-00	26006-70		$ 12,635.28
2500	3000	**Honda 6.5 hp, Banjo Wet Seal Pump**	123"	104"	106	26005-02	26006-71		$ 12,918.96
1500	1800	**Honda 13 hp ES, Banjo Wet Seal Pump**	123"	104"	86"	26005-06	26006-72		$ 14,098.32
2000	2400	**Honda 13 hp ES, Banjo Wet Seal Pump**	123"	104"	91	26005-07	26006-73		$ 14,527.44
2500	3000	**Honda 13 hp ES, Banjo Wet Seal Pump**	123"	104"	106	26005-08	26006-74		$ 14,768.64

The Free Form MIXSYS unit is designed for blending dry concentrate products *(like Agrotain Plus)* with liquid fertilizer. Typically, dumping large bulk bags/containers can be very difficult with a regular tank. With large lid opening, ladder system, 2 pump package options, 4 agitators nozzles for fast efficient blending, 10° cone bottom for complete drainage and low overall height.

Features:

- These units come standard with Ladder pkg, 2 motor/pump combo choices and large lid system
- Units come plumbed ready for use
- Cone bottom tank has an optimum 10° slope to offer best blending, lower heights and complete drainage
- A unique blending system complete with 4 agitator jets, antivortex fitting, complete drain bulkhead fitting
- Heavy-duty stand and tanks make this unit robust and built to last for years of trouble-free operation
- Completely welded seams to prevent corrosion with durable powder coated paint
- 3" plumbing is standard and the unique layout allows you to use this pump to circulate your tank farm as well
- Plumbing setup also allows you to bypass the pump and use the pump from other units to load or unload
- Easily secured to a trailer
- Custom fabricated extra large tank top opening, with lid, to allow for easy fills from bulk bags/containers

Freeform PLASTICS
A Division of Bourgault Industries Ltd.

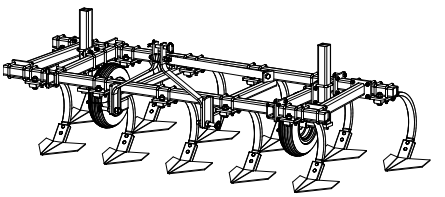

Model 1000, 3-Point Hitch Cultiator Price List

Model	Description	No. of Shanks	Part No.		SUGGESTED RETAIL
5.25'	5.25' Frame Assembly c/w shanks (less sweeps)	7	1077		$1,435.68
6.75'	6.75' Frame Assembly c/w shanks (less sweeps)	9	1078		$1,738.80
8.25'	8.25' Frame Assembly c/w shanks (less sweeps)	11	1091		$2,269.44

OPTIONAL			
Extension kit to make the 5.25' unit a 6.75' width	1160		$321.12
Extension kit to make the 5.25' unit a 8.25' width	1161		$930.96
Gauge Wheel Kit	1079		$315.36
Sweeps. 11"	1131		$23.95
Plow Bolts	1166		$0.86
Universal Quick Hitch Adaptor (required to make unit compatible with quick hitch adaptors)	1077-03		$93.60

Features and Specifications

The Free Form cultivator has a low "ground to lower link pin" distance which enables the cultivator to be properly lifted out of the ground on smaller horsepower tractors.

With the Free Form cultivator you are able to add extensions to increase the size at a later date.

Manufactured by a leader in the tillage business. Backed by a three year warranty, five year shank breakage warranty and a lifetime shank bending exchange warranty.

Maximum working depth	8 inches
Ground to lower pin distance	16 inches (Allows unit to be properly raised on small HP tractors)
Under-frame clearance	21-1/2 inches
Shank spacing	9 inches
Number of shanks	5.25FT = 7 shanks, 6.75FT = 9 shanks, 8.25FT = 11 shanks
Frame size	2-1/2" x 2-1/2" x 3/16"
Cross members	2" x 3" x 3/16"
Shanks	7/8" x 2" solid mount 47 degree with 1/2" holes on 1-3/4" centres.
Hitch	Category 1 hitch. (Cat.2 pending)
Horsepower	Tractors up to approximately 65 HP
Gauge wheel	Optional
Shipping weight	5.25' = 360 lbs. / 6.75' = 465 lbs. / 8.25' = 565 lbs.

Freeform PLASTICS
A Division of Bourgault Industries Ltd.

Pricing Procedure:
Refer to our Application chart to ensure you have selected the right Packages for your specific application. This chart is available on Page 22 or our website.

Swath Roller Price List

Related Patents: CDN 2,311,694 & CDN 2,635,859

Package #1 - STYLE	PART NUMBER		SUGGESTED RETAIL
MOUNTED			
MT2000 Mounted Swath Roller - Winch (For use on solid rear axle windrower)	7101-00		$2,415.60
MT2000 Mounted Swath Roller - Winch (For use on split rear axle windrower)	7101-40		$2,435.76
TOW BEHIND			
Tow Behind Swath Roller (complete unit)	1084		$3,393.36
Note: If you have selected the Tow Behind there are no other Packages required			

Package #2 - OPERATION (Must select to complete Mounted Roller ONLY)			
Manual Winch Version ([A, B, C] under Package 4 may be required)	7101-01		$979.20
Hydraulic Version	7101-02		$1,166.40
Note: If you have selected the Manual Winch model you can skip Package #3			

Package #3 - VERSION (Must select to complete MT3000 Hydraulic Version)			
MacDon M100/105 & John Deere W110	2676-01		$1,098.72
MacDon M150/200	2483		$1,159.92
MacDon M155/205 & John Deere W150/W155	2862-01		$1,159.92
MacDon M1 & M2 & John Deere W170 Series[C] ([C]additional kit required to fit rear axle)	2875-01		$599.76
John Deere W235/W260 (With HD mounting brackets for rear steering clearance)	2684-01		$1,756.80
John Deere 4895/4995[A] ([A]additional kit required if windrower has shock absorbers)	2677-01		$1,098.72
John Deere 400 Series[A] ([A]additional kit required if mounting a winch model unit)	2682-01		$1,159.92
Massey/Hesston/Challenger 9400 Series	2683-01		$1,098.72
Massey/Hesston/Challenger WR9700&9800 Series[B] ([B]additional kit required to fit rear axle)	2921-01		$1,098.72
*Massey/Hesston/Challenger WR9900 Series[B] ([B]additional kit required to fit rear axle)	2876-01		$534.24
*Massey/Hesston/Challenger WR197/236/265 ([B]additional kit required to fit rear axle	2877-01		$534.24
Case WD 3 Series	2678-01		$1,098.72
Case Series 2 & New Holland 130/160/200/220/240	2680-01		$1,098.72
New Holland HW & 8000 Series	2679-01		$1,098.72
Universal Kit - for other models not listed (may need additional hose and fittings)	2435		$1,098.72

Package #4 - OPTIONAL PACKAGES & UPGRADES (Required for some applications)			
[A]Tower Extension Kit – John Deere (required for non high lift and all winch models)	2809		$439.92
[B]Massey Ferguson WR Series Bracket for models with Hydraulic rear steer	26002-43		$439.92
[C]MacDon M1 Series Brackets for mounting of mounted roller	26004-23		$500.40
*These kits require additional packages to be purchased from the manufacturer to complete install			
Note: For parts or additional conversion kits please contact Free Form			

Adjustable width from 6' to 10' to accommodate varying swath sizes. Patented feature.
Available in trailer type, winch & cable mounted style or hydraulic cylinder mounted style
Quick & smooth height adjustment. Corrosion & dent proof polyethylene roller

Freeform PLASTICS
A Division of Bourgault Industries Ltd.

Swath Roller Application Chart

				STYLE									
				MT2000 Mounted Manual Winch			MT2000 Mounted Hydraulic (Discontinued)				MT3000 Mounted Hydraulic		
Make	Model	Model Number Detail	Tow Behind	Common Frame	Winch Kit	Required Options	Common Frame	Hydraulic Common Kit	Hydraulic Specific Kit	Required Options	Frame & Hydraulic	Hydraulic Specific Kit	Required Options
Case IH	WDX Series	WDX1101 / 1701 / 1901	1084	7101-00	7101-01	None Required	7101-00	7101-02	2678-01	None Required	7102-02	2678-01	None Required
	WDX2 Series	WDX1002S / 1202 / 1202S / 1902 / 2302	1084	7101-00 or 7101-40	7101-01	None Required	7101-00 or 7101-40	7101-02	2678-01	None Required	7102-02 or 7102-40	2678-01	None Required
	WD3 Series	WD1203 / WD1903 / WD2303	1084	7101-00 or 7101-40	7101-01	None Required	7101-00 or 7101-40	7101-02	2678-01	None Required	7102-02 or 7102-40	2678-01	None Required
	WD 3 Series II	WD1203 Series II / WD1903 Series II / WD2303 Series II	1084	7101-00 or 7101-40	7101-01	None Required	7101-00 or 7101-40	7101-02	2680-01	None Required	7102-02 or 7102-40	2680-01	None Required
	WD 4 Series	WD1204 / 1504 / 1904 / 2104 / 2304 / 2504	1084	7101-00 or 7101-40	Not Available	None Required	7101-00 or 7101-40	7101-02	2680-01	None Required	7102-02 or 7102-40	2680-01	None Required
Challenger	SP Series	SP80 / SP110 / SP165 / SP85B / SP115B / SP185B / SP115C / SP185C	1084	7101-00	7101-01	None Required	7101-00	7101-02	2683-01	None Required	7102-02	2683-01	None Required
	WR9700 Series	WR9725 / WR9735 / WR9740 / WR9760 / WR9770	1084	7101-00	7101-01	None Required	7101-00	7101-02	2921-01	None Required	7102-02	2921-01	None Required
	WR9800 Series	WR9840 / WR9860 / WR9870	1084	7101-00	7101-01	None Required	7101-00	7101-02	2921-01	None Required	7102-02	2921-01	None Required
	WR9800 Series	WR9840 / WR9860 / WR9870* c/w hydraulic rear steer option	1084	7101-00	*7101-01**	26002-43	7101-00	7101-02	2921-01	26002-43	7102-02	2921-01	26002-43
	WR9900 Series	WR9900* c/w hydraulic rear steer option	1084	7101-00	*7101-01**	26002-43	7101-00	7101-02	2876-01	26002-43	7102-02	2876-01	26002-43
	WR197/236/265	WR197/236/265* c/w hydraulic rear steer option	1084	7101-00	*7101-01**	26002-43	7101-00	7101-02	2877-01	26002-43	7102-02	2877-01	26002-43
***Note on a winch model the handle will need to be shortened to allow this to work**													
***Note on a hydraulic model there are additional packages required to be purchased from the machine manufacturer to complete the install**													
John Deere	4895 / 4995	(W/O Shock Absorbers on rear casters)	1084	7101-00	7101-01	None Required	7101-00	7101-02	2677-01	None Required	7102-02	2677-01	None Required
	4895 / 4995	(With Shock Absorbers on rear casters)	1084	7101-00	7101-01	2809	7101-00	7101-02	2677-01	2809	7102-02	2677-01	2809
	400 Series	A400 / D450 / R450	1084	7101-00	7101-01	2809	7101-00	7101-02	2682-01	*None Required*	7102-02	2682-01	*None Required*
	W110	W110	1084	7101-00	7101-01	None Required	7101-00	7101-02	2676-01	None Required	7102-02	2676-01	None Required
	W150	W150	1084	7101-00	7101-01	None Required	7101-00	7101-02	2862-01	None Required	7102-02	2862-01	None Required
	W155	W155	1084	7101-00	7101-01	None Required	7101-00	7101-02	2862-01	None Required	7102-02	2862-01	None Required
	W170	W170	1084	7101-00	7101-01	26004-23	7101-00	7101-02	2875-01	26004-23	7102-02	2875-01	26004-23
	W200 Series	W200 / W235 / W260	1084	7101-00	7101-01	None Required	7101-00	7101-02	2684-01	None Required	7102-02	2684-01	None Required
***Note you can add pn#2809 brackets to move unit back to allow opening side doors with roller in the up position**													
Harvest Pro	8100 Series	8140 / 8150 / 8152 / 8152i / 8152c	1084	7101-00	7101-01	None Required	7101-00	7101-02	2435	None Required	7102-02	2435	None Required
Hesston	8000 Series	8250 / 8250S / 8450 / 8550 / 8550S	1084	7101-00	7101-01	None Required	7101-00	7101-02	2683-01	None Required	7102-02	2683-01	None Required
	9000 Series	9230 / 9240 / 9260	1084	7101-00	7101-01	None Required	7101-00	7101-02	2683-01	None Required	7102-02	2683-01	None Required
MacDon	9000 Series	9250 / 9350 / 9352 / 9352i / 9352c	1084	7101-00	7101-01	None Required	7101-00	7101-02	2435	None Required	7102-02	2435	None Required
	M100/105	M100 / M105	1084	7101-00	7101-01	None Required	7101-00	7101-02	2676-01	None Required	7102-02	2676-01	None Required
	M150/200	M150 / M200	1084	7101-00	7101-01	None Required	7101-00	7101-02	2483	None Required	7102-02	2483	None Required
	M155/205	M155 / M205	1084	7101-00	7101-01	None Required	7101-00	7101-02	2862-01	None Required	7102-02	2862-01	None Required
	M1 & M2 Series	M1170 / M1240 & M2170 / M2260	1084	7101-00	7101-01	26004-23	7101-00	7101-02	2875-01	26004-23	7102-02	2875-01	26004-23
Massey Ferguson	200 Series	200 / 220 / 220XL	1084	7101-00	7101-01	None Required	7101-00	7101-02	2435	None Required	7102-02	2435	None Required
	9000 Series	9220 / 9225 / 9420 / 5230 / 5240 / 5260	1084	7101-00	7101-01	None Required	7101-00	7101-02	2683-01	None Required	7102-02	2683-01	None Required
	9400 Series	9425 / 9430 / 9435 / 9635	1084	7101-00	7101-01	None Required	7101-00	7101-02	2683-01	None Required	7102-02	2683-01	None Required
	WR9700 Series	WR9725 / WR9735 / WR9740 / WR9760 / WR9770	1084	7101-00	7101-01	None Required	7101-00	7101-02	2921-01	None Required	7102-02	2921-01	None Required
	WR9800 Series	WR9840 / WR9860 / WR9870	1084	7101-00	7101-01	None Required	7101-00	7101-02	2921-01	None Required	7102-02	2921-01	None Required
	WR9800 Series	WR9840 / WR9860 / WR9870* c/w hydraulic rear steer option	1084	7101-00	*7101-01**	26002-43	7101-00	7101-02	2921-01	26002-43	7102-02	2921-01	26002-43
	WR9900 Series	WR9900* c/w hydraulic rear steer option	1084	7101-00	*7101-01**	26002-43	7101-00	7101-02	2876-01	26002-43	7102-02	2876-01	26002-43
	WR197/236/265	WR197/236/265* c/w hydraulic rear steer option	1084	7101-00	*7101-01**	26002-43	7101-00	7101-02	2877-01	26002-43	7102-02	2877-01	26002-43
***Note on a winch model the handle will need to be shortened to allow this to work**													
***Note on a hydraulic model there are additional packages required to be purchased from the machine manufacturer to complete the install**													
New Idea	5000 Series	5830 / 5830X / 5840	1084	7101-00	7101-01	None Required	7101-00	7101-02	2683-01	None Required	7102-02	2683-01	None Required
New Holland	HW Series	HW300 / 305 / 305S / 320 / 325 / 340 / 345 / 365	1084	7101-00 or 7101-40	7101-01	None Required	7101-00 or 7101-40	7101-02	2679-01	None Required	7102-02 or 7102-40	2679-01	None Required
	H8000 Series	H8040 / H8060 / H8080	1084	7101-00 or 7101-40	7101-01	None Required	7101-00 or 7101-40	7101-02	2679-01	None Required	7102-02 or 7102-40	2679-01	None Required
	130/200/240 Series	130 / 200 / 240	1084	7101-00 or 7101-40	Not Available	None Required	7101-00 or 7101-40	7101-02	2680-01	None Required	7102-02 or 7102-40	*2680-01*	*None Required*
	160/220/260 Series	160 / 220 / 260	1084	7101-00 or 7101-40	Not Available	None Required	7101-00 or 7101-40	7101-02	2680-01	None Required	7102-02 or 7102-40	2680-01	None Required
Prairie Star	4900 Series	4940 / 4950 / 4952 / 4952i / 4952c	1084	7101-00	7101-01	None Required	7101-00	7101-02	2435	None Required	7102-02	2435	None Required
Premier	2900 Series	2940 / 2950 / 2952 / 2952i / 2952c	1084	7101-00	7101-01	None Required	7101-00	7101-02	2435	None Required	7102-02	2435	None Required
	M100/105	M100 / M105	1084	7101-00	7101-01	None Required	7101-00	7101-02	2676-01	None Required	7102-02	2676-01	None Required
	M150	M150	1084	7101-00	7101-01	None Required	7101-00	7101-02	2483	None Required	7102-02	2483	None Required
	M155	M155	1084	7101-00	7101-01	None Required	7101-00	7101-02	2862-01	None Required	7102-02	2862-01	None Required
Westward	9000 Series	9250 / 9350 / 9352 / 9352i / 9352c	1084	7101-00	7101-01	None Required	7101-00	7101-02	2435	None Required	7102-02	2435	None Required
	M100/105	M100 / M105	1084	7101-00	7101-01	None Required	7101-00	7101-02	2676-01	None Required	7102-02	2676-01	None Required
	M150/200	M150 / M200	1084	7101-00	7101-01	None Required	7101-00	7101-02	2483	None Required	7102-02	2483	None Required
	M155/205	M155 / M205	1084	7101-00	7101-01	None Required	7101-00	7101-02	2862-01	None Required	7102-02	2862-01	None Required

Last Updated 23-Oct-2024

NOTE: Starting in 2026 we will be offering the MT2000 in both the Manual Winch and Hydraulic version and we have discontinued offering the MT3000 hydraulic model.
All hydraulic specific kits will work on either the MT2000 or MT3000 hydraulic models

DISCONTINUED

ROTO-SHEAR

How to order Roto-Shear:

In the majority of applications it is best to use the Roto-Shear's as a set on both sides of the header. To do this you will need to order 2 of Package #1 which is the Common unit that fits all headers. Then you will need to select From Package #2 the Header Specifc kit which will have the mounting brackets, braces and hoses required to complete the install for 1 header. (Unless otherwise noted)

Note:
Refer to our Application chart to ensure you have selected the right parts for your specific application. This chart is available on Page 26 or our website.

Roto-Shear Price List

Package #1 - Roto-Shear Unit (this will do 1 side of header)	PART NUMBER		
Roto-Shear Common unit (includes Collector Rod and Divider Board)	27000-00		$1,130.40

Package #2 - Header Specific Kit (this will do both sides of header)	PART NUMBER		
Universal Header Kit (Includes mounting hardware & hose kit[A])	27000-01		$712.08
Honeybee 2013 & Older Header Kit (Includes mounting hardware & hose kit[A])	27000-03		$637.92
Honeybee 2014 & Newer Header Kit (Includes mounting hardware & hose kit[A])	27000-04		$724.32
MacDon 960/972 Header Kit (Includes mounting hardware & hose kit[A])	27000-05		$744.48
MacDon D50 Header Kit (Includes mounting hardware & hose kit[A])	27000-06		$653.04
MacDon D60/D65/D75/D1XL & JD 400/1400 Series Header Kit (Includes mounting hardware & hose kit[A])	27000-07		$905.76
MacDon D2 & JD 1500 Series Header Kit (Includes mounting hardware & hose kit[A])	27001-34		$905.76
M.F. 5200 & AGCO 5000 - 25' Header Kit (Includes mounting hardware & hose kit)	27000-08		$1,425.60
M.F. 5200 & AGCO 5000 - 30' Header Kit (Includes mounting hardware & hose kit)	27000-09		$1,481.04
M.F. 5200 & AGCO 5000 - 36' Header Kit (Includes mounting hardware & hose kit)	27000-10		$1,536.48
M.F. 5300 Header Kit (Includes mounting hardware & hose kit[A&B])	27000-11		$845.28
M.F. 5400 Header Kit (Includes mounting hardware & hose kit[A])	27001-30		$726.48
M.F. 5400 - 25' Header Kit (Includes mounting hardware & complete hose kit)	27001-30-25		$1,425.60
M.F. 5400 - 30' Header Kit (Includes mounting hardware & complete hose kit)	27001-30-30		$1,481.04
M.F. 5400 - 35' Header Kit (Includes mounting hardware & complete hose kit)	27001-30-35		$1,537.92
M.F. 5400 - 40' Header Kit (Includes mounting hardware & complete hose kit)	27001-30-40		$1,593.36
John Deere 600D Draper Header Kit (Includes mounting hardware & hose kit[A])	27000-12		$685.44
John Deere D600 Draper Header Kit (Includes mounting hardware & hose kit[A])	27001-35		$905.76

NOTES:

[A] These kits will require hoses and fittings to connect from the header to the valve for the Roto-Shear, from the valve from the Roto-Shear to the far valve to the far Roto-Shear and from the far valve from the far Roto-Shear back to the header to complete the installation.

[B] Requires the addition of an auxiliary hydraulic pump kit to operate the Roto-Shears or contact Free Form.

For additional kits, parts, accessories, etc. refer to pages 24 & 25 (Roto-Shear Parts Price List) or contact Free Form.

ROTO-SHEAR

Note:
Refer to our Application chart to ensure you have selected the right parts for your specific application. This chart is available on Page 26 or our website.

Roto-Shear Parts Price List

Replacement Parts & Hose Kits	PART NUMBER		
Roto-Shear unit ONLY (NO Collector Rod or Divider Board)(NO Mounts)(NO Hose Kit)	27000-13		$923.04
Honeybee 2014 & newer Mounting Brace - Left Side	HBLB14		$48.24
Honeybee 2014 & newer Mounting Brace - Right Side	HBRB14		$48.24
Honeybee 2014 & newer Mounting Boot - (used for both sides)	HBBT14		$42.48
Honeybee 2013 & older Mounting Brace - Left Side	HBLB08		$57.60
Honeybee 2013 & older Mounting Brace - Right Side	HBRB08		$57.60
John Deere Draper Mounting Bracket - Left Side	JDLB11		$109.44
John Deere Draper Mounting Bracket - Right Side	JDRB11		$109.44
MacDon 972 Mounting Brace - (used for both sides)	MD972B13		$37.44
MacDon D50 Mounting Brace - Left Side	MDLB08		$47.52
MacDon D50 Mounting Brace - Right Side	MDRB08		$47.52
MacDon D50 Mounting Brace - Short (used for both sides)	SMDB11		$41.04
MacDon D50 Mounting Boot - (used for both sides)	MDBT08		$97.92
MacDon D60/65/75/D1XL & JD 400/1400 Mounting Bracket - Left Side	MDD65LB13		$295.20
MacDon D60/65/75/D1XL & JD 400/1400 Mounting Bracket - Right Side	MDD65RB13		$295.20
MacDon D2 & JD 1500 Mounting Bracket (used for both sides)	27001-34-01		$295.20
M.F. 5200 / AGCO 5000 Mounting Bracket (used for both sides)	MAB12		$166.32
M.F. 5200 / AGCO 5000 Mounting Brace - Left Side	MLB08		$37.44
M.F. 5200 / AGCO 5000 Mounting Brace - Right Side	MRB08		$56.16
M.F. 5200 / AGCO 5000 Mounting Brace Support - Right Side	MF52RBB		$23.04
M.F. 5300 Mounting Bracket (used for both sides)	MAB15		$164.88
M.F. 5300 Mounting Brace - Left Side	MF53LB		$71.28
M.F. 5300 Mounting Brace - Right Side	MF53RB		$71.28
Universal Mounting Bracket (used for both sides)	MB08		$154.08
Universal Hose Kit - c/w 10' hoses and ball valve (complete to do both sides)	UHK15		$545.76
Universal Hose Kit 1 Side Only - c/w 10' hoses and ball valve	UHK15-01		$273.60
Honeybee Hose Kit (2014 & newer) - (both sides)(for use with Roto-Shear Ready headers)	HBHK14		$635.76
Honeybee Hose Kit (2014 & newer) 1 Side Only - for use with Roto-Shear Ready header	HBHK14-01		$250.56
Massey Ferguson 5200 / AGCO 5000 Hose Kit (25 ft) - (complete to do both sides)	MHK15		$1,262.16
Massey Ferguson 5200 / AGCO 5000 Hose Kit (30 ft) - (complete to do both sides)	MHK12		$1,333.44
Massey Ferguson 5200 / AGCO 5000 Hose Kit (36 ft) - (complete to do both sides)	MHK14		$1,420.56
Massey Ferguson 5300 Hose Kit - (does both sides, does not have cross header hoses)	MF53HK		$663.12
Massey Ferguson 5400 Hose Kit - (does both sides, does not have cross header hoses)	MF54HK		$573.12
Massey Ferguson 5400 Hose Kit (25 ft) - (cross header hoses to complete install)	MF54HK25		$624.96
Massey Ferguson 5400 Hose Kit (30 ft) - (cross header hoses to complete install)	MF54HK30		$696.24
Massey Ferguson 5400 Hose Kit (35 ft) - (cross header hoses to complete install)	MF54HK35		$768.96
Massey Ferguson 5400 Hose Kit (40 ft) - (cross header hoses to complete install)	MF54HK40		$839.52

Note: Service parts are available on Service Parts Price List (Page 25)

ROTO-SHEAR

Roto-Shear Service Parts Price List

Replacement Parts & Hose Kits	PART NUMBER		
Sunrise c/w decals	SR09		$299.52
Rotor c/w bolt-in hub, H1 Browning bushing and 6 sickle blades	ROTB13		$252.72
Hydraulic Motor - c/w ORB ports c/w case drain port (920 rpm @ 12 GPM)	27000-15		$356.78
Hydraulic Motor Seak Kit (New version, for motors BMPH-N)	27000-15-01N		$43.91
Hydraulic Motor Seak Kit (Old version, for motors BMPH-)	27000-15-01		$43.91
Sickle Section c/w Special sickle bolts and cone lock nuts (Kit of 1)	27000-16-1		$5.33
Sickle Section c/w Special sickle bolts and cone lock nuts (kit of 6)	27000-16-6		$29.47
Sickle Sections	27000-16		$2.34
Sickle Bolt	27000-17		$1.06
Sickle Nut - (Cone Lock Nut)	27000-18		$0.40
Rotor hub - Small c/w Hardware	27001-27		$15.20
Rotor hub - Large	27000-20		$24.37
Collector Rod	CR02		$69.12
Divider Board	DB02		$220.32
Flat Head Carriage Bolt	27000-67		$4.40
Pressure Compensated Variable Flow Control Valve c/w Relief - 3/4" ORB ports	27000-48		$192.76
Ball Valve - 1/2" Stainless Steel	27000-47		$49.55

Note: For any Service parts not listed contact us

For Complete Unit pricing refer to Page 23

For Brackets, Braces and Hose Kits refer to Page 24

ROTO-SHEAR

Roto-Shear Application Chart

			STYLE		PARTS							
Make	Model	Model Years	Roto-Shear Common	Header Specific Kit	Roto-Shear Unit Only	Collector Rod & Divider Board	Mounting Bracket - Left	Mounting Bracket - Right	Mounting Braces - Left	Mounting Braces - Right	Other Mounting Hardware	Hose Kit
Case	2162		27000-00	27000-07	27000-13	2 @ CR02 & 2 @ DB02	MDD65LB13	MDD65RB13	N/A	N/A	N/A	UHK15
	4000 Series	2014 & Newer (needs to be Roto-Shear ready)	27000-00	27000-04	27000-13	2 @ CR02 & 2 @ DB02	N/A	N/A	HBLB14	HBRB14	2 @ HBBT14	HBHK14
Honeybee		2013 & Older	27000-00	27000-03	27000-13	2 @ CR02 & 2 @ DB02	N/A	N/A	HBLB08	HBRB08	N/A	UHK15
	Black & Yellow 4000 Series	2014 & Newer (needs to be Roto-Shear ready)	27000-00	27000-04	27000-13	2 @ CR02 & 2 @ DB02	N/A	N/A	HBLB14	HBRB14	2 @ HBBT14	HBHK14
	Yellow WS/WSP/WSA	2015 & Up	27000-00	N/A	27000-13	2 @ CR02 & 2 @ DB02	N/A	N/A	To Be Confirmed	To Be Confirmed	2 @ HBBT14	UHK15
	Black GBH Combine	2015 & Up	27000-00	N/A	27000-13	2 @ CR02 & 2 @ DB02	N/A	N/A	To Be Confirmed	To Be Confirmed	2 @ HBBT14	UHK15
John Deere	400 & 1400 Series (MacDon)		27000-00	27000-07	27000-13	2 @ CR02 & 2 @ DB02	MDD65LB13	MDD65RB13	N/A	N/A	N/A	UHK15
	500 Series	2015 & Up	27000-00	N/A	27000-13	2 @ CR02 & 2 @ DB02	N/A	N/A	To Be Confirmed	To Be Confirmed	2 @ HBBT14	UHK15
	600D & 900 Series		27000-00	27000-12	27000-13	2 @ CR02 & 2 @ DB02	JDLB11	JDRB11	N/A	N/A	N/A	UHK15
	D600 Series (Honeybee)		27000-00	27001-35	27000-13	2 @ CR02 & 2 @ DB02	To Be Confirmed	To Be Confirmed	To Be Confirmed	To Be Confirmed	N/A	UHK15
	D1500 Series (MacDon)		27000-00	27001-34	27000-13	2 @ CR02 & 2 @ DB02	27001-34-01	27001-34-01	N/A	N/A	N/A	UHK15
MacDon	960		27000-00	27000-05	27000-13	2 @ CR02 & 2 @ DB02	MB08	MB08	MD972B13	MD972B13	N/A	UHK15
	972		27000-00	27000-05	27000-13	2 @ CR02 & 2 @ DB02	MB08	MB08	MD972B13	MD972B13	N/A	UHK15
	D50		27000-00	27000-06	27000-13	2 @ CR02 & 2 @ DB02	SMDB11	SMDB11	MDLB08	MDRB08	2 @ MDBT08	UHK15
	D60 & D70		27000-00	27000-07	27000-13	2 @ CR02 & 2 @ DB02	MDD65LB13	MDD65RB13	N/A	N/A	N/A	UHK15
	D65 & D75		27000-00	27000-07	27000-13	2 @ CR02 & 2 @ DB02	MDD65LB13	MDD65RB13	N/A	N/A	N/A	UHK15
	D1 XL Series	2017+	27000-00	27000-07	27000-13	2 @ CR02 & 2 @ DB02	MDD65LB13	MDD65RB13	N/A	N/A	N/A	UHK15
	D2 Series		27000-00	27001-34	27000-13	2 @ CR02 & 2 @ DB02	27001-34-01	27001-34-01	N/A	N/A	N/A	UHK15
Massey Ferguson	5200 - 25'		27000-00	27000-08	27000-13	2 @ CR02 & 2 @ DB02	MAB12	MAB12	MLB08	MRB08	N/A	MHK15
	5200 - 30'		27000-00	27000-09	27000-13	2 @ CR02 & 2 @ DB02	MAB12	MAB12	MLB08	MRB08	N/A	MHK12
	5200 - 36'		27000-00	27000-10	27000-13	2 @ CR02 & 2 @ DB02	MAB12	MAB12	MLB08	MRB08	N/A	MHK14
	5300		27000-00	27000-11	27000-13	2 @ CR02 & 2 @ DB02	MAB15	MAB15	MF53LB	MF53RB	N/A	UHK15
	5300 - 25'		27000-00	27000-11	27000-13	2 @ CR02 & 2 @ DB02	MAB15	MAB15	MF53LB	MF53RB	N/A	UHK15
	5300 - 30'		27000-00	27000-11	27000-13	2 @ CR02 & 2 @ DB02	MAB15	MAB15	MF53LB	MF53RB	N/A	UHK15
	5300 - 35'		27000-00	27000-11	27000-13	2 @ CR02 & 2 @ DB02	MAB15	MAB15	MF53LB	MF53RB	N/A	UHK15
	5300 - 40'		27000-00	27000-11	27000-13	2 @ CR02 & 2 @ DB02	MAB15	MAB15	MF53LB	MF53RB	N/A	UHK15
	5400		27000-00	27002-30	27000-13	2 @ CR02 & 2 @ DB02	MAB15	MAB15	MF53LB	MF53RB	N/A	MF54HK
	5400 - 25'		27000-00	27002-30-25	27000-13	2 @ CR02 & 2 @ DB02	MAB15	MAB15	MF53LB	MF53RB	N/A	MF54HK25
	5400 - 30'		27000-00	27002-30-30	27000-13	2 @ CR02 & 2 @ DB02	MAB15	MAB15	MF53LB	MF53RB	N/A	MF54HK30
	5400 - 35'		27000-00	27002-30-35	27000-13	2 @ CR02 & 2 @ DB02	MAB15	MAB15	MF53LB	MF53RB	N/A	MF54HK35
	5400 - 40'		27000-00	27002-30-40	27000-13	2 @ CR02 & 2 @ DB02	MAB15	MAB15	MF53LB	MF53RB	N/A	MF54HK40
New Holland	Duraswath	2013 & Older	27000-00	27000-03	27000-13	2 @ CR02 & 2 @ DB02	N/A	N/A	HBLB08	HBRB08	N/A	UHK15
	4000 Series	2014 & Newer (needs to be Roto-Shear ready)	27000-00	27000-04	27000-13	2 @ CR02 & 2 @ DB02	N/A	N/A	HBLB14	HBRB14	2 @ HBBT14	HBHK14
Universal			27000-00	27000-01	27000-13	2 @ CR02 & 2 @ DB02	MB08	MB08	N/A	N/A	N/A	UHK15

Last Updated 27-May-2025

Description of kits:

Roto-Shear Common kit includes the RotoShear unit itself along with a collector rod and divider board (this would do 1 side of a header only)

Header Specific Kits will include any mounts or braces as well as hoses* to install the kit onto a header, it would include both sides

****With reference to the hose kits, the UHK15 or Universal Hose kit includes the hoses that go from the RotoShears to the back of the header with a ball valve for between the hoses to allow them to be shut off when not in use. This kit will require 3 more hoses to complete the install***

Freeform PLASTICS
A Division of Bourgault Industries Ltd.

Full set of 4 starts at $6,996.00 for the Manual version or $11,800.00 for the Electric Version

How to order the Crop Divider:

In the majority of applications it is best to use the Crop Divider's as a set on both front and rear wheels. To do this you will need to order 2 of Package #1 which is the Mounting Brackets that fit your sprayer. Then you will need to select from Package #2 the Crop Divider kit (nose cone and arms) that are required to complete your installation. Then you can choose whether you want to have Manual or Electric operation from the remaing pkg's.

Crop Divider Price List

Package #1 - Mounting Bracket Kits (2 of this pkg required if doing both front & rear)	Pkg #2	PART NUMBER		SUGGESTED RETAIL
AGRIFAC Condor Endurance 1 & 2 Mounting Brackets - Front Only*	STD	26008-60		$714.24
AGRIFAC Condor Endurance 1 & 2 Mounting Brackets - Rear Only	STD	26008-62		$684.72
**AGRIFAC Condor Endurance 1 & 2 Stair Offset Kit - Optional*	n/a	26008-61		$702.00
AGRIFAC Condor 5 Mounting Brackets - Front Only*	SHORT	26008-63		$714.24
AGRIFAC Condor 5 Mounting Brackets - Rear Only	SHORT	26008-64		$684.72
**AGRIFAC Condor 5 Stair Offset Kit - Optional*	n/a	26008-65		$723.60
CASE Patriot 30 Series (Pre-2016) Mounting Brackets - Front or Rear	STD	26008-30		$662.40
CASE Patriot 40 Series (Post-2016) Mounting Brackets - Front or Rear	STD	26008-31		$584.64
CASE Patriot 50 Series Mounting Brackets - Front or Rear	STD	26008-32		$662.40
CASE Trident 50 Series Mounting Brackets - Front or Rear	STD	26008-33		$662.40
John Deere 4730 Mounting Brackets - Front or Rear	STD	26008-40		$433.44
John Deere R4044 Mounting Brackets - Front or Rear	STD	26008-42		$433.44
John Deere R4045 Mounting Brackets - Front or Rear	STD	26008-41		$399.60
Horsch VL Mounting Brackets - Front or Rear	STD	26008-80		$503.28
New Holland SP310F (2 Wheel Steer) Mounting Brackets - Front Only	SHORT	26008-50		$380.88
New Holland SP310F (2 Wheel Steer) Mounting Brackets - Rear Only	SHORT	26008-52		$410.40
New Holland SP370F (4 wheel steer) Mounting Brackets - Front or Rear	STD	26008-51		$410.40
New Holland SP400F (4 Wheel Steer) Mounting Brackets - Front or Rear	STD	26008-50		$380.88
Rogator 900 Mounting Brackets - Front or Rear	STD	26008-70		$403.20

Package #2 - Crop Divider Kit (2 of this pkg req'd to do both front & rear)(refer to Pkg #1 which one is req'd)	PART NUMBER		SUGGESTED RETAIL
Crop Divider Assembly - **STD** (Standard) - includes 2 plastic dividers with metal arms, fits front or rear of unit	26008-15		$2,039.76
Crop Divider Assembly - **SHORT** - includes 2 plastic dividers with metal arms, fits front or rear of unit	26008-12		$2,039.76

Package #3 - Manual Operation Kit (2 of this pkg required if doing both front & rear)	PART NUMBER		SUGGESTED RETAIL
Manual Height Adjustment Kit - includes 2 adjustment arms (Front or Rear)	26008-20		$97.92

Package #4 - Electric Operation Kits	PART NUMBER		SUGGESTED RETAIL
Front Electric Height Adjustment Kit - includes 2 actuators, Rotary Encoder, main wiring harness	26008-08		$2,356.56
Rear Electric Height Adjustment Kit - includes 2 actuators and additional wiring harness (Front kit is required with this)	26008-09		$1,298.16

For models that are not listed contact us as we are always working on new applications

Freeform PLASTICS
A Division of Bourgault Industries Ltd.

Crop Divider Application Chart

Make	Model	Year	Serial Number	Package #1			Package #2		Package #3	Package #4		
				Front	Rear	Ladder	Front	Rear	Manual	Front	Rear	Notes
Agrifac	Condor 5			26008-63	26008-64	26006-65	26008-12	26008-12	26008-20	26008-08	26008-09	Ladder is optional
	Condor Vanguard			26008-66	26008-67	26006-68	26008-15	26008-15	26008-20	26008-08	26008-09	Ladder is optional
	Condor Endurance			26008-60	26008-62	26006-61	26008-15	26008-15	26008-20	26008-08	26008-09	Ladder is optional
Case IH	Patriot 30 Series	09/11 - 09/14		26008-30	26008-30	N/A	26008-15	26008-15	26008-20	26008-08	26008-09	
	Patriot 40 Series	08/14 - Current		26008-31	26008-31	N/A	26008-15	26008-15	26008-20	26008-08	26008-09	
	Patriot 50 Series	11/21 - Current		26008-32	26008-32	N/A	26008-15	26008-15	26008-20	26008-08	26008-09	
	Trident 50 Series	Current		26008-33	26008-33	N/A	26008-15	26008-15	26008-20	26008-08	26008-09	
John Deere	4710/4720/4730/4830			26008-40	26008-40	N/A	26008-15	26008-15	26008-20	26008-08	26008-09	
	R4023			26008-40	26008-40	N/A	26008-15	26008-15	26008-20	26008-08	26008-09	
	R4030/R4038/R4044			26008-42	26008-42	N/A	26008-15	26008-15	26008-20	26008-08	26008-09	
	R4045/R4060			26008-41	26008-41	N/A	26008-15	26008-15	26008-20	26008-08	26008-09	
	410R/412R/			26008-42	26008-42	N/A	26008-15	26008-15	26008-20	26008-08	26008-09	
	612R/616R			26008-41	26008-41	N/A	26008-15	26008-15	26008-20	26008-08	26008-09	
Horsch	LEEB VL	2022 - Current		26008-80	26008-80	N/A	26008-15	26008-15	26008-20	26008-08	26008-09	
	LEEB VN	2022 - Current		Contact us	Contact us	N/A	26008-15	26008-15	26008-20	26008-08	26008-09	
New Holland	SP310F Guardian 1000 GA - Tier 2	12/22 - Current		26008-50	26008-52	N/A	26008-12	26008-12	26008-20	26008-08	26008-09	2 Wheel Steer
	SP310F Guardian 1200 GA - Tier 2	12/22 - Current		26008-50	26008-52	N/A	26008-12	26008-12	26008-20	26008-08	26008-09	2 Wheel Steer
	SP370F Guardian - Tier 4B			26008-51	26008-51	N/A	26008-15	26008-15	26008-20	26008-08	26008-09	4 Wheel Steer
	SP400F Guardian			26008-50	26008-50	N/A	26008-15	26008-15	26008-20	26008-08	26008-09	4 Wheel Steer
Rogator	RG Series - RG900/1100/1300 RG900B/1100B/1300B RG900C/1100C/1300C	2012 - 2014 2015 - 2017 2018 - 2022	CXXX1001 - EXXX9999 FXXX1001 - HXXX9999 JXXX1001 - NXXX9999	26008-70	26008-70	N/A	26008-15	26008-15	26008-20	26008-08	26008-09	2WS & 4 WS

NOTE: For other models contact us as we are continually developing kits for more applications

Last Updated 24-Oct-2025

sales@freeformplastics.com
Phone: (306) 275-2155
Fax: (306) 275-2101

Freeform PLASTICS
A Division of Bourgault Industries Ltd.

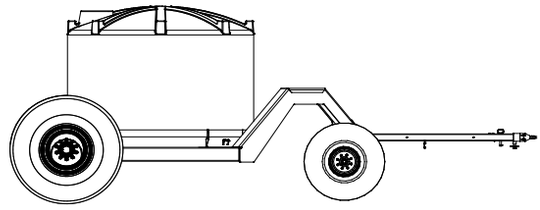

Liquid Fertilizer Cart Price List

LIQUID CART TANK/FRAME PACKAGES (Note: This Package does not include any tires)								SUGGESTED
Model	**Capacity - Imperial**	**Capacity - US**	**Length**	**Width**	**Height**	**Part No.**		**RETAIL**
LC-1500	1500	1800	288"	161"	92"	2417		$19,123.20
LC-2000	2000	2400	288"	161"	108"	2418		$19,553.76
LC-2500	2500	3000	288"	161"	124"	2419		$19,984.32

TIRES PACKAGES - OPTIONAL			
23.1X26 R1 Lug Rear & 21.5x16.1 Lug Front	2420		$10,792.80
28LX26 R1 Lug Rear & 21.5x16.1 Lug Front	2421		$13,957.20
30.5Lx32 R2 Rice Lug Rear & 540/65R24 R1W Lug Front	2422		$24,357.60
900/60R32 R1W Lug Rear & 540/65R24 R1W Lug Front	TBD		$32,249.00

MAIN PUMP PACKAGES - OPTIONAL			
CDS/John Blue Single Piston Pump (34 GPM)	2423		$7,380.00
CDS/John Blue Double Piston Pump (68 GPM)	2424		$10,046.16
Ground Drive, No Pump, No Plumbing	TBD		$3,432.00
No Pump, No Drive, No Plumbing option - mount only	TBD		$98.00

TRANSFER PUMP PKG - OPTIONAL			
3" Banjo Transfer Pump c/w 6.5 hp Honda Gas Engine	2426		$3,517.92
No Transfer Pump (caps and adapter only)	TBD		$85.00

MAIN PUMP CONTROL SWITCH HARNESS PACKAGE - OPTIONAL			
Extension Harness c/w Liquid hose extension to run across A/S Tank	2427		$547.20

Features:

- Bourgault Liquid Carts come standard with Safety Light pkg, Ladder pkg, Electric Clutch Pkg, and emergency Rinse
- Bourgault Liquid Carts can be purchased based on the options above, contact us with any questions
- Cone bottom tanks have an optimum 10° slope to offer greater cart stability, lower cart heights and complete drainage
- A unique and low maintenance self-tensioning, easy adjustment ground drive system is standard equipment
- Heavy-duty common cart frame and spindles allow for tank upgrades. Rear hitch is standard
- Carts are designed to accommodate Trelleborg tires and rims or other specialty tires

Freeform PLASTICS
A Division of Bourgault Industries Ltd.

Auger Accessory Price List

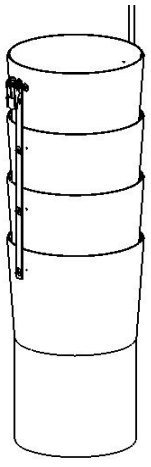

NEW **"No Snag"** black in color, ratchet buckle, Ultra Duty strapping!

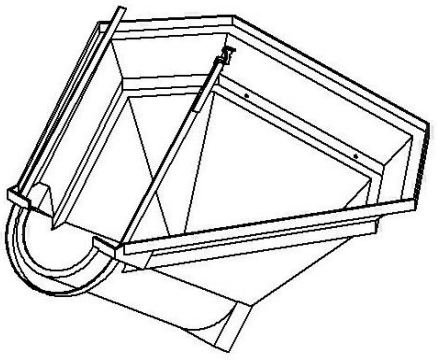

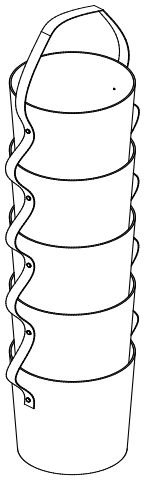

NEW all downspouts black in color, ratchet buckle, Ultra Duty strapping!

Auger Downspout Price List

DESCRIPTION	LENGTH	DIAMETER	Extended	Retracted	PART NUMBER		SUGGESTED RETAIL
10" Retractable Auger Downspout	10 FT	10"	10"	2.25"	1404		$507.60
16" Auger Downspout - "NO SNAG"	57"	17-1/2"	9"	4"	26005-55		$141.84
14" Auger Downspout - "NO SNAG"	57"	15-3/4"	9"	4"	26005-76		$129.60
12" Auger Downspout - "NO SNAG"	48-1/2"	13-3/4"	7-1/2"	3-1/2"	26005-73		$105.84
10" Auger Downspout - "NO SNAG"	48-1/2"	11-3/4"	7-1/2"	3-1/2"	26005-70		$91.44
8" Auger Downspout - "NO SNAG"	40"	9-3/4"	6"	3"	26005-67		$72.72
7" Auger Downspout - "NO SNAG"	40"	8-3/4"	6"	3"	26005-64		$68.40
16" Auger Downspout - Regular	51"	17-1/2"	9"	4"	26006-90		$141.12
14" Auger Downspout - Regular	51"	15-3/4"	9"	4"	26006-89		$136.80
12" Auger Downspout - Regular	43"	13-3/4"	7-1/2"	3-1/2"	26006-88		$112.32
10" Auger Downspout - Regular	43"	11-3/4"	7-1/2"	3-1/2"	26006-87		$96.48
8" Auger Downspout - Regular	35"	9-3/4"	6"	3"	26006-86		$75.60
7" Auger Downspout - Regular	38"	8-3/4"	6"	3"	26006-85		$73.44
Retractable Auger Downspout Kit	-	-	-	-	1762		$193.68
1" Ratchet Buckle	-	-	-	-	8059-99		$10.20
Downspout Replacement Strap per Ft	-	-	-	-	1320		$0.74
1" Steel Buckle (older spouts)	-	-	-	-	1223		$2.86
1" Black Plastic Slide (older spouts)	-	-	-	-	1276		$0.77

Auger Hopper Price List

DESCRIPTION	LENGTH	WIDTH	HEIGHT	PART NUMBER		SUGGESTED RETAIL
6" Auger Hopper c/w straps	31-5/16"	34"	19"	2816-6		$77.76
7" Auger Hopper c/w straps	33-9/16"	36-5/16"	19-1/2"	2816-7		$80.64
8" Auger Hopper c/w straps	37-1/2"	39-1/2"	20-1/2"	2816-8		$82.08
10" Auger Hopper c/w straps	49"	41-1/8"	23-1/2"	2816-10		$115.92

H2O FIRE PRO Price List

SPECIFICATIONS								SUGGESTED
Model	**Capacity - Imp**	**Capacity - US**	**Length**	**Width**	**Height**	**Part No.**		**RETAIL**
40 US Gal	33.3	40	34-3/16"	20"	23-1/8"	26006-78		$853.92

*comes complete with wiring harness

OPTIONAL			SUGGESTED
Description	**Part No.**		**RETAIL**
Scotty Foam-Fast Applicator 3/4" GHT	26006-80		$135.36
Scotty 12" Foam Cartridge 3 PK	26006-81		$112.32

Features:

Can be mounted to grain carts, combines, service trucks, ATV's, SXS's, etc.
Intended for fighting fires and hot spots
Deliveres strong uniform stream of water to the intended area
40 US gallon (33.33 Imp gal, 151.4 liter) tank
Weighs 35 lbs empty
Easy use molded carry handle
5 GPM On-Demand pump providing the user 8 minutes of continuous use
Easy to use adjustable nozzle
Drain plug
1/2" inserts in the bottom of the tank for securing or molded grooves for straps

POLYTOON™

Polytoon DIY Dock Components Price List

DESCRIPTION	PART NUMBER		SUGGESTED RETAIL
POLYTOON FLOAT – 200 Lb (24" long x 16" wide x 16" high)	**1046**		$64.08
POLYTOON WHEELED FLOAT – 250 Lb (30" long x 16" wide x 24" high)	**26000-30**		$190.80
POLYTOON FLOAT – 400 Lb (19" diameter x 48" long)	**1987**		$153.36
CORNER HINGE - Large (Used when joining dock sections of same width)	**26006-14**		$40.32
CORNER HINGE - Small (Used when joining dock sections of same width)	**26006-15**		$40.32
FLAT HINGE - Large (Used when joining dock sections of different widths	**1811**		$25.92
FLAT HINGE - Small (Used when joining dock sections of different widths	**1812**		$25.92
CORNER BRACE (Used on inside corners for additional strength)	**1138**		$11.52
BACKING PLATE - (3 req'd per Corner hinge and 2 per Flat hinge)	**1389**		$2.00
DOCK PIN (Pin hitch 1/2" x 4-1/4", 12" Chain)	**4650-86**		$13.68
DOCK POST BRACKET KIT (includes dock post bracket, auger, post cap and hardware)	**26004-70**		$89.28
DOCK POST (in Inches)(Aluminum Round Tubing 2" OD x 0.125" wall)(std 20' lengths)	**5500-16**		$0.61
DOCK POST ASSEMBLY - 120" Long (incl 10' post, auger, hardware, cap)	**26009-21**		$97.92
DOCK POST only 120" - cut to length @ 120", post only no components	**26009-16-120**		$97.92
DOCK POST COMPONENTS - includes auger, hardware, cap	**26009-22**		$23.04
DOCK AUGER (PLASTIC - 2")	**2910**		$22.32
DOCK POST CAP (2")	**2911**		$4.32
DOCK SHORE KIT (Shore brackets, Pin Anchors, Pin hammer, Dock pins & hdw)	**26002-70**		$162.00
THRU-FLOW DECKING Maple Color stk, P/N#2724-00 (60" long), P/N#2724-01 (48" Long)	**2724-01**		$43.20
DOCK POST SOLAR LIGHT 2PK	**26009-78**		$75.60
DOCK CLEAT - 8" PLASTIC CW HDW	**26009-79**		$13.68
DOCK CLEAT - 8" PLASTIC CW SOLAR & HDW	**26009-76**		$53.28
DOCK ALUMINUM LADDER - FLIP UP	**26009-81**		$460.80
DOCK POST MUD AUGER	**26009-82**		$110.16
DOCK POST RATCHET	**26009-83**		$264.96
5/16" x 2-1/2" UNC Bolt Cap - Galvanized	**1002-31**		$1.44
5/16" x 4" UNC Bolt Cap - Galvanized	**1002-44**		$1.44
5/16" x 3" Lag Bolt - Galvanized	**1110-03**		$1.44
5/16" Lock Washer Split - Galvanized	**1220-11**		$1.44
5/16" Nut - Galvanized	**1201-26**		$0.06
5/16" Washer Flat - Galvanized	**1325-87**		$1.44

NOTE: ALL HINGES ARE GALVANIZED TO PREVENT CORROSION AND PROVIDE A LONG AND TROUBLE FREE LIFE. A HIGH QUALITY HINGE IS ESSENTIAL WHEN BUILDING A DOCK SYSTEM.

POLYTOON™

Polytoon Plastic Dock Sections Price List

STANDARD DOCK SIZES	AREA	WEIGHT	PART NUMBER		SUGGESTED RETAIL
3' X 10' POLYTOON PLASTIC DOCK SECTION 1875# Floatation	**30 FT^2**	**175#**	**26009-01**		$842.40
4' X 10' POLYTOON PLASTIC DOCK SECTION 2600# Floatation	**40 FT^2**	**230#**	**26009-02**		$1,066.32
5' X 10' POLYTOON PLASTIC DOCK SECTION 3345# Floatation	**50 FT^2**	**280#**	**26009-03**		$1,270.08
6' X 10' POLYTOON PLASTIC DOCK SECTION 4600# Floatation	**60 FT^2**	**340#**	**26009-04**		$1,550.16
4' X 4' POLYTOON PLASTIC DOCK CORNER	**8 FT^2**	**55#**	**26009-07**		$298.80

Polytoon Plastic Dock Components Price List

DESCRIPTION	PART NUMBER		SUGGESTED RETAIL
DOCK CONNECTOR ASSEMBLY - 45" Long (for short side of 4' dock)	**26009-10-02**		$177.12
DOCK CONNECTOR ASSEMBLY - 93" Long (for short side of 4' +4' dock)	**26009-10-06**		$360.00
DOCK CONNECTOR ASSEMBLY - 117" Long (for long side of dock)	**26009-10-08**		$442.80
DOCK CONNECTOR ASSEMBLY - 237" Long (for long side of 2 docks long)	**26009-10-09**		$872.64
DOCK BUMPER KIT - 36" Vertical Mount	**26009-15**		$74.88
DOCK POST KIT - Post Bracket Assembly (does not include the post)	**26009-20**		$257.76
DOCK POST ASSEMBLY - 120" Long (incl 10' post, auger, hardware, cap)	**26009-21**		$97.92
DOCK POST only 144" - cut to length @ 144", post only no components	**26009-16-144**		$111.60
DOCK POST only 120" - cut to length @ 120", post only no components	**26009-16-120**		$97.92
DOCK POST only 96" - cut to length @ 96", post only no components	**26009-16-96**		$69.84
DOCK POST COMPONENTS - includes auger, hardware, cap)	**26009-22**		$23.04
DOCK ANCHOR KIT - (does not include chain or anchor)	**26009-30**		$108.00
DOCK LADDER KIT - Flip-up Style (aluminum)	**26009-35**		$460.80
DOCK WHEEL KIT - (this is 1 assembly only)	**26009-40**		$260.64
DOCK PILE HOOP KIT - 8" Diameter	**26009-45**		$252.00
DOCK PILE HOOP KIT - 10" Diameter	**26009-46**		$252.00
DOCK PILE HOOP KIT - 12" Diameter	**26009-47**		$252.00
DOCK LIGHT STIFF ARM KIT - Pipe ordered seperately	**26009-50**		$139.68
DOCK HEAVY STIFF ARM KIT - Pipe ordered seperately	**26009-55**		$451.44
DOCK 4' X 10' RAMP KIT - Aluminum frame with Thru-Flow Vinyl Decking	**26009-61**		$1,251.36
DOCK 10' RAIL KIT - 1 Side only per kit (call for other lengths needed)	**26009-73**		$613.44
DOCK CLEAT - 8" CW SOLAR & HDW	**26009-76**		$53.28
DOCK CLEAT - 8" PLASTIC CW HDW	**26009-79**		$13.68
DOCK ALUMINUM LADDER - FLIP UP	**26009-81**		$460.80
DOCK POST MUD AUGER	**26009-82**		$110.16
DOCK POST RATCHET	**26009-83**		$264.96

grayed out items are currently unavailable, contact for more info

POLAR GRIP
TRUCK WEIGHT SYSTEM

Polar Grip Price List

Description	PART NUMBER		SUGGESTED RETAIL
32" Universal - Full Size Truck Approx. 48"wide x 32" long	**2500-32**		$208.08
40" Universal - Full Size Truck Approx. 48"wide x 40" long	**26000-22**		$249.84
48" Universal - Full Size Truck Approx. 48"wide x 48" long	**2500-48**		$290.16
56" Universal - Full Size Truck Approx. 48"wide x 56" long	**2500-56**		$332.64
64" Universal - Full Size Truck Approx. 48"wide x 64" long	**2500-64**		$373.68
72" Universal - Full Size Truck Approx. 48"wide x 72" long	**2500-72**		$415.44
80" Universal - Full Size Truck Approx. 48"wide x 80" long	**2500-80**		$456.48
88" Universal - Full Size Truck Approx. 48"wide x 88" long	**2500-88**		$498.24
96" Universal - Full Size Truck Approx. 48"wide x 96" long	**2500-96**		$540.00

Replacement parts	PART NUMBER		SUGGESTED RETAIL
8" Universal Plank	**2500**		$35.28
Anchor Clip	**26000-24**		$16.10
Connection Plate	**26000-23**		$20.71
Snap in plug	**26000-84**		$0.68

Note:

The above complete systems include the required planks to make up the length of system, plus the required side straps, anchor plates and Stainless Steel Hardware.

All Systems carry a “Two (2) Year Warranty” against manufacturing defects!

FENDERCO

Truck & Trailer Products

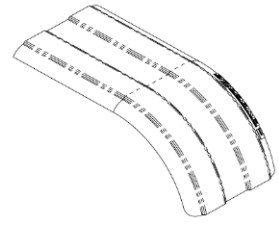

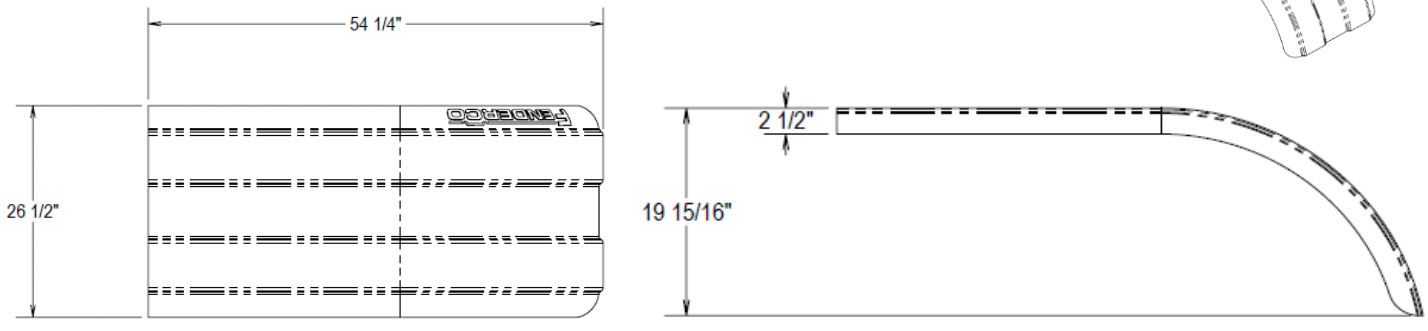

Tandem Fenders - Half & Full				
Part Number	**Description**	**Color**		**MSRP**
26006-30	**New Truck Fender 60" - Right**	Black		$134.64
26006-43	**New Truck Fender 60" - Left**	Black		$134.64
26006-33	**New Truck Fender 60" Set - Single No Mudflap (Both Sides)**	Black		$550.08
26006-34	**New Truck Fender 60" Set - Double No Mudflap (1 side)**	Black		$493.56
26006-35	**New Truck Fender 60" Set - Double c/w Mudflap (1 side)**	Black		$545.76

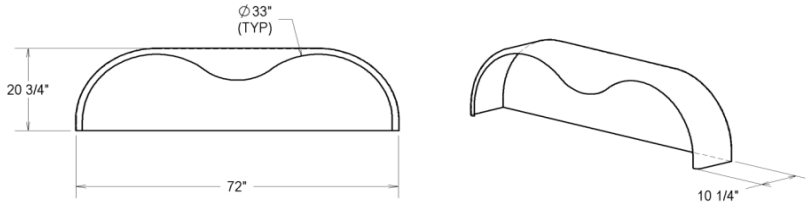

TTF-72-B	**Single Tandem Trailer Fender**	Black		$145.44

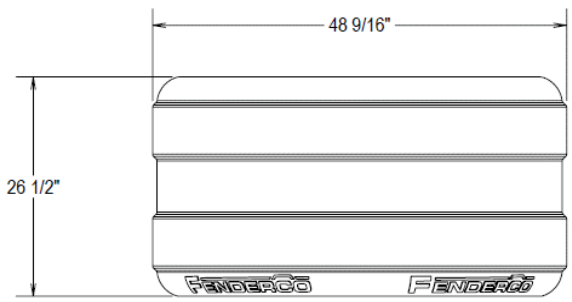

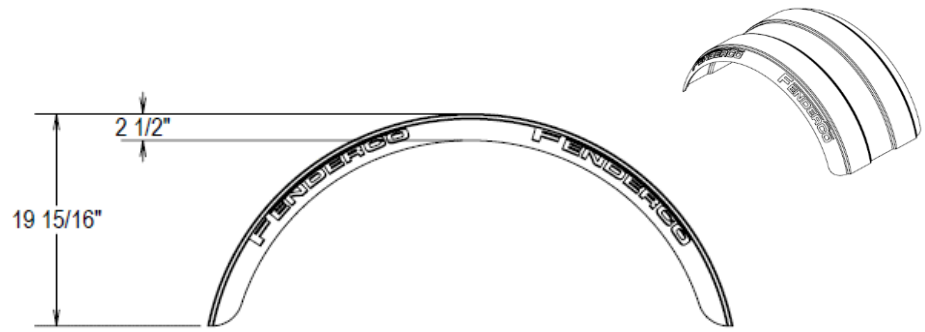

Single Axle Fenders - also referred to as Tub Fenders or 180° style				
Part Number	**Description**	**Color**		**MSRP**
26006-29	**New Round 180° Tub Fender - no mounting, fender only**	Black		$134.64
26006-31	**New Round 180° Tub Fender - No Mudflap - includes mounting**	Black		$260.64
26006-32	**New Round 180° Tub Fender - c/w Mudflap - includes mounting**	Black		$312.84

Mount Kits & Mud Flaps				
Part Number	**Description**	**Color**		**MSRP**
M-RTF-60	**Mount Kit for RTF-60/STF-60**	Black		$140.40
2778	**Tandem Join Kit (60" Truck Fenders)**	Black		$41.76
M-RTR-180	**Mount Kit for RTR-180/STF-3**	Black		$126.00
2728	**"Fenderco" Brand Mud Flap Kit**	Black		$104.40

Limited Lifetime Warranty
All fender products manufactured by Freeform Plastics are backed by a limited lifetime warranty. We will warranty any defects in workmanship and materials for the life of the fenders. All other mounting hardware and brackets are guaranteed to be free from defects for a period of one (1) year from date of purchase.

Exemptions from this limited warranty are as follows: cleaning with any substance other than soap and water, damage due to road hazards are not covered, any misuse or accidental impact damage is not covered.

In order to receive warranty the authorized dealer must first call Freeform Plastics for a return authorization number. The part(s) must then be return to Freeform Plastics in St. Brieux, SK, freight prepaid, with the return authorization number attached.

FENDERCO

Price List

CDN Patent #2,143,027
US Patent #5,839,743

Motor Graders (HD Mounting Brackets Included)

Description	Models	MSRP
Rear set (4)	All Models (Except John Deere)	$3,151.44
Rear set (4)	John Deere G, D, C & B Series	$2,774.16
Front set (2)	All models (Except CAT & JD G/GP Series)	$1,725.84
Front set (2)	CAT - Steerable (Non Suspension)	$2,067.84
Front set (2)	JD - G/GP Series	$1,866.96
Front set (2)	Cat M Series - Steerable - Suspension	$2,774.16
	NOTE: All front fender sets come standard with flip up mudflap kit	
Extension Kit (4")	All Models With 20.5 Tires	
Full Set (6)	Part #3001	$665.28
Rear set (4)	Part #2197	$474.48
Front set (2)	Part #2199	$248.40
Individual (1)	Part #2165	$124.56
Replacement Fender	All Models - Front or Rear (Each)	$359.28
Mud Flap Kit - Flip up (Hardware included)(P/N# 2792)		$215.28

Backhoes (HD Mounting Brackets Included)

Description	Models	MSRP
Front Set Only (2)	All Models (C/W Tire Size 12 x 16.5 or 12.5/80R18)	$804.24

MOTOR GRADER & BACKHOE NOTES:

► When ordering motor grader fenders, please specify **MAKE**, **MODEL**, **TIRE SIZE**
► Fenderco products come with a one (1) year limited warranty. Limited Lifetime Warranty on Poly Fenders.
► Fenderco motor grader fenders are 3/8" in thickness.
► Shorter brackets to accommodate 14.00R24 & 17.50R25 tires & rims (same height).
Longer brackets for 16.00R24 & 20.5R25 Tires.

Freight: F.O.B. St. Brieux, Sk, Canada

Freeform
PLASTIC PRODUCTS
A DIVISION OF BOURGAULT INDUSTRIES LTD.

Email : sales@freeformplastics.com

Ph: 306-275-2155 **Fax: 306-275-2101**